The World of the Expert Witness

IEEE-CNSV
Consultants' Network of Silicon Valley

Consultants' Network of Silicon Valley

Webinar
December 13, 2022

Please put your questions in the Q&A box (not chat)
Answered after presentation.

The World of the Expert Witness

IEEE-CNSV
Consultants' Network of Silicon Valley

- **Joel Williams – Presenter** joel@williams-consulting.com

Joel Williams is an Expert Witness who has been involved in over 50 cases. He started his career at Bell Labs, and has been a consultant for over 40 years. Joel specializes in networking and Linux software. He is an IEEE Senior Life Member, and a CNSV Board Director

- **Brian Berg – Panelist** bberg@StanfordAlumni.org

Brian Berg is a technical consultant specializing in consumer electronics devices and data storage, including flash memory. He has been a consultant for over 40 years, and has extensive Expert Witness experience. Brian is past Chair of the Santa Clara Valley Section, past CNSV Board Chair, and is currently a CNSV Director. He is also Region 6 History Chair, and a member of the IEEE History Committee where he has worked extensively on IEEE Milestones both in Region 6 and the UK.

- **Andrew Wolfe – Panelist** awolfe@awolfe.org

Andrew Wolfe, Ph.D. has over 25 years of experience as an expert witness in computer systems, consumer electronics, and related services. He has participated in more than 200 litigation matters, and has testified in court more than 20 times. Dr. Wolfe is an IEEE Fellow and a CNSV At-Large Director. He now teaches full time in Santa Clara University's Department of Electrical and Computer Engineering.

Overview

IEEE-CNSV
Consultants' Network of Silicon Valley

What is a Technical Expert

Required Skills

Personal Qualities

Role of the Expert Witness

Working with attorneys

What an Expert does

Getting Started

Q&A Panel

Types of Experts

IEEE-CNSV
Consultants' Network of Silicon Valley

Technical / Damages / Business Practices ...

- **This presentation is for design engineers and focuses on technical experts**

  mostly determine if products infringe a patent or if is a trade secret used.

- **Damages experts do financial analysis**

  how much defendant was harmed, e.g., lost sales, royalties

- **Business Practices experts**

  how industry works: contracts, payments, operations, marketing, regulatory ...

Testifying / Non-Testifying Experts

IEEE-CNSV
Consultants' Network of Silicon Valley

Testifying / Non-Testifying

- Non-Testifying backs up testifying expert

  May work isolated from testifying expert.

Testifying Expert

IEEE-CNSV
Consultants' Network of Silicon Valley

- Testifying expert gives opinions (opines) based on disclosed materials and public sources.

  Disclosed materials include proprietary product design info, software source code, internal testing results, etc.

  Public sources include anything in public domain – anywhere in the world, in any language. Usually text books, technical papers, open source code.

  Usually included in reports and trial testimony.

- Testifying expert may also prepare and present tutorials on technical subjects for (non-technical) judges or others.

Non-Testifying Expert

IEEE-CNSV
Consultants' Network of Silicon Valley

- Non-testifying expert may filter extraneous info and point testifying expert to most relevant materials.
- Non-testifying expert may draft preliminary info, which testifying expert may consider when writing their own expert report.

What is an Expert

IEEE-CNSV
Consultants' Network of Silicon Valley

- **Businessperson**
  - Usually a sole proprietor
  - Responsible for marketing, taxes, benefits, office, computers, etc.
  - Customers: usually attorneys – either directly or through brokers
- **Purveyor of expertise**
  - Sells expertise in a technical area.
  - Charge for time spent, rate depends on expertise, experience & credentials
- **Analyst**
  - Analyze patents, products, documents
  - Compare products to patents
- **Teacher**
  - Explain complex technology to non-technical people

Required Skills

IEEE-CNSV
Consultants' Network of Silicon Valley

- Knowledge of technical area
- Good people skills
  - Deal with people of different personalities and motivations.
  - Always professional, personable
  - Able to maintain focus and be succinct
- Good communication skills
  - teaching / explaining / technical writing
- Understanding of basic patent and legal principals

Legal Skills

IEEE-CNSV
Consultants' Network of Silicon Valley

- Working knowledge of patent terms and law
  - Most technical experts come from a technical background and pick up the patent terms/law, often by working as a non-testifying expert.
  - Reading: patent law basics, introductory EW training and expert reports from other cases
  - Helps to have gotten your own patent – gone through the process
  - Helps to have a mentor – not involved with the case.

Patent Law Basics

IEEE-CNSV
Consultants' Network of Silicon Valley

Understanding patent basics is fundamental to analyzing patent infringement.

Example terminology from patent code: **(U.S. Code (USC) Title 35)**

Section 102 – **novelty** – is it really an invention, not been done before – called "prior art"

Section 103 – **non-obvious** – requires more than ordinary ingenuity and skill. (Using a wheel on a wheel barrow would be obvious.)

Helpful Personal Qualities

IEEE-CNSV
Consultants' Network of Silicon Valley

- Pedigree - PhD in relevant field is most desired
  - Significant work experience is also adequate
  - Williams does not have a PhD – nor do some other successful EWs
- Attention to detail
- Quick study
- Debating skills: “think on your feet"
- Do not get flustered / frustrated
- Thick Skin
- Theater skills

Role of the Expert Witness

IEEE-CNSV
Consultants' Network of Silicon Valley

- Expert as foot-soldier
  - Legal cases are a war - fought with words.
  - The attorneys are the warriors who wage the battle.
  - Experts are tools used by the attorney in the fight.

Role of the Expert Witness

IEEE-CNSV
Consultants' Network of Silicon Valley

First duty is to:

Educate the court & give your opinion

- The expert is impartial
  - Explain the facts, form opinion based on facts.
  - Not an advocate for “your“ side.

The expert can't win.

IEEE-CNSV
Consultants' Network of Silicon Valley

- The expert has no direct financial interest in outcome of case.
  - Gets paid well, but for time/expenses only.
- It is the attorneys' war to win or loose.
  - If the case is won, the Attorney gets the credit.

Expert Works for Attorney

IEEE-CNSV
Consultants' Network of Silicon Valley

- Help them with their case
  - Point out problems, make suggestions to help their case
- Operate on their schedules - carved in sand
  - A lot of hurry-up and wait - long delays
  - Last minute marathons are the norm.

What Expert Does – a closer look

IEEE-CNSV
Consultants' Network of Silicon Valley

- Contribute your technical knowledge to case
- Analyze patents, documents, products
- Form opinions based on analysis and facts
- Prepare reports to the court
- Defend reports in deposition
- Testify at trial

What the Expert Does - Review

IEEE-CNSV
Consultants' Network of Silicon Valley

Review many many many documents

- Patents and related documents (e.g. history)
- Case documents

  Example: court rulings on definition of terms (claim construction ruling).
- Discovery: Usually on-line, accessed through VPN
- Depositions of employees and other “fact witnesses”
- Public sources
  - Text books, technical papers, dictionaries, etc.
  - Can use anything in research, but only rely on authoritative sources – not Wikipedia

What the Expert Does - Analysis

IEEE-CNSV
Consultants' Network of Silicon Valley

Analyze Accused Products

- User and design documentation
- Software code / hardware schematic review
- Product testing

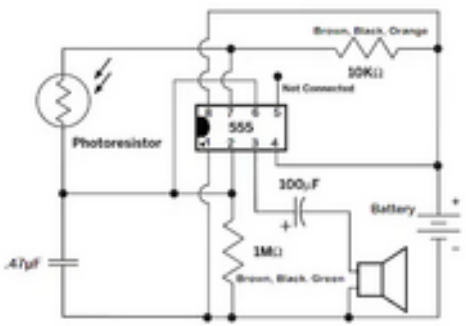

```
int
main(int argc, char** argv)
{
    int i,j,k,x,maxpoint, field, lpfield, nlines=0;
    int nameline_found=0;
    char *cp;
    struct labels *lp, *lp1;
    int curr_arg, width, height;
    FILE *bfmt_fd = NULL; // from bfmt.dat
    struct obj_info *ifp;
    struct line_info *lip;
```

What the Expert Does - Contribute to case

IEEE-CNSV
Consultants' Network of Silicon Valley

- Provide preliminary opinions.
- Point out strengths & weakness in case.
- May prepare or review "claim charts".
  - Claim chart lists each patent claim element and shows how accused product infringes that element.
  - Good starting point, but may have errors/omissions.
  - May be more of an outline at a superficial level.
  - May need to be updated and enhanced.

'352 Patent Claim 1	U.S. Patent No. 5,561,706 to Fenner (Priority: Sept. 29, 1992) ("Fenner")
forwarding data identifying the wireless communication terminal from the mobile communications switching office to an operator service system;	"A billing code entered by a mobile user designates a billing authority for a call. The billing authority forwards to the switch, if the switch is not already storing it, its service profile for the mobile user." Fenner at Abstract. "Referring now to FIG. 3, there is presented an illustration of the procedure for logging onto a personal communications system switch 4. The user attempts to logon to a PCS switch at step 20 by entering his personal identification number 2 and billing code. The billing code can be any number code indicating a billing authority who maintains the service profile to be used. The PCS switch receives at step 22 the

- May prepare a technical tutorial
  - For judge or others at court
  - For attorney's clients

What the Expert Does - Really be an expert

IEEE-CNSV
Consultants' Network of Silicon Valley

- Know the Patent – backward & forward
  - Includes patent history, related patents
- Come up to speed on all aspects of relevant technology
  - State of the art at time patent application was filed.
- Learn the accused products
  - How relevant features work, certifications, product reviews, support and bug reports ...

What the Expert Does - Prepare Expert Reports

IEEE-CNSV
Consultants' Network of Silicon Valley

- Major part of expert's work
- Submitted to court
- Formal statement of Experts opinions
- Subject to “rebuttal” from expert(s) on opposing side of case.

What the Expert Does - What is in the Expert Report

IEEE-CNSV
Consultants' Network of Silicon Valley

Usually, hundreds of pages, many “exhibits” attached.

- Your background - why you are qualified to give an opinion
- Relevant patent law
- The general technology at issue
- Explanation of the patent
- Court’s interpretation of any terminology (claim construction ruling)
- Explanation of accused product(s)
- Your analysis, opinions and basis for opinions
- Conclusions based on your opinions: the product does/does not infringe each claim

What the Expert Does - Types of reports & slinging mud

IEEE-CNSV
Consultants' Network of Silicon Valley

- Infringement Report
  - Plaintiff expert explains how product infringes (does) the patent.
  - Defendant expert issues a rebuttal report explaining why plaintiff expert is wrong.
- Invalidity Report
  - Defendant expert explains why patent is invalid
  - Plaintiff expert issues a rebuttal report explaining why defendant expert is wrong.

Plaintiff is the party bringing a lawsuit

Defendant is the party being sued.

What an Expert Does - How expert prepares a report

IEEE-CNSV
Consultants' Network of Silicon Valley

- Do analysis – often an ongoing process
- Discuss your findings with attorneys
- Draft report
  - Review with attorneys and revise
  - Everything in report must be correct & complete
  - May require educating attorney and negotiation
  - Be prepared to defend every statement in report.

What an Expert Does - Deposition: Defend Reports

IEEE-CNSV
Consultants' Network of Silicon Valley

- Opposing expert will find every flaw or omission in experts report.
- Deposition
  - Opposing attorney “grills“ expert on their report

What an Expert Does - The "Live" Deposition

IEEE-CNSV
Consultants' Network of Silicon Valley

- Opposing attorney will depose expert
  - Experts sits at one end of a conference table
  - Attorneys from both sides around the table
  - Court stenographer – maybe video recording
  - Opposing attorney will ask questions
  - Can last from ½ day to several days.
  - Plaintiff w/ multiple defendants – multiple depositions

What an Expert Does - The Remote Deposition

IEEE-CNSV
Consultants' Network of Silicon Valley

Remote Deposition (e.g. Zoom)

- Expert may be at home office or attorney office
- Attorneys from both sides attend, and court reporter is in cyberspace.
- Documents for review may be provided beforehand.
- Essential to have a good mic and headset, also good video cam and lighting. Decent bandwidth. Maybe a green screen with appropriate background.

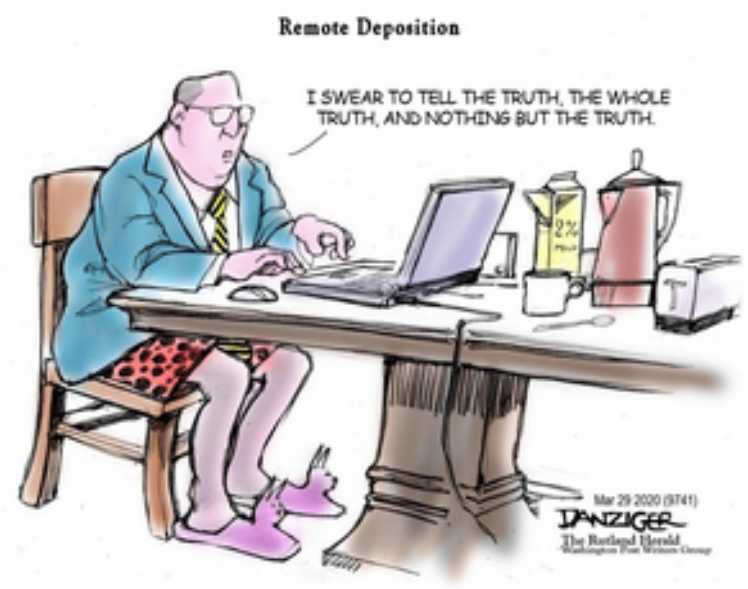

What an Expert Does - Deposition Process

IEEE-CNSV
Consultants' Network of Silicon Valley

- Opposing Attorney will ask any questions they want.
  - “Should“ be relevant to case
  - Ask about experts’ background, knowledge of technology, patent, products
  - Ask about experts' opinion and basis for opinion
  - Experts' attorney will object to improper questions
- What the opposing attorney wants to accomplish:
  - Get expert admit to any flaws in expert report
  - Get expert say things that may help her case
  - Determine how well expert will look to a jury

What an Expert Does - Preparing for the Trial - 1

IEEE-CNSV
Consultants' Network of Silicon Valley

Help to prepare the “story“ for the jury

- At this point in the case, only a few claims or arguments will be presented to the jury. Most of your expert analysis becomes irrelevant, only a few items will survive for you to talk about.
- It’s all about telling a more convincing story than the opposite side’s story. Needs to be believable, truthful, correct, and defensible.

What an Expert Does - Preparing for the Trial - 2

IEEE-CNSV
Consultants' Network of Silicon Valley

- Prepare for direct testimony - tell the story
- Prepare for cross-examination
  - Opposing attorney asks questions

    No way to know what will be asked.

    Best preparation is to know the case, reports and other materials extremely well.

What an Expert Does - At the trial

IEEE-CNSV
Consultants' Network of Silicon Valley

- Follow case as it unfolds
  - Particularly listen to other experts
- Testify
  - Direct examination
  - Cross examination

IPR – Inter Partes Review

IEEE-CNSV
Consultants' Network of Silicon Valley

- A different kind of case
- Someone petitions the PTO to review validity of the patent
  no accused products involved.
- Expert prepares a report similar to a jury trial case.
- A patent board reviews the report.
- Attorneys present case at a hearing.
- Expert does NOT testify at hearing.
- Simpler for expert, much faster timeline.

Join the fun - become an expert !!!

IEEE-CNSV
Consultants' Network of Silicon Valley

- Search your soul – is this for you?
  - Demanding intellectual challenges
  - Exacting and precise work – lots of study
  - Unpredictable work loads/schedules
  - OK with opposing side attacking your work
  - Constantly changing work colleagues – attorneys
  - Self motivated – independent worker - entrepreneurial
- No skeletons in the closet
  - Arrest record, legal troubles, plagiarism accusations
  - False resumes or other damning info in circulation
- Rewards
  - $$$$$ - off the engineer's salary curve scale
  - Nice to be on winning side

How to get started

IEEE-CNSV
Consultants' Network of Silicon Valley

- Slow transition is best
  - Engineering consulting intermixed with EW work
- Start as non-testifying expert or consultant
  - Support testifying expert
  - Do analysis research, product testing, etc
  - Sell your tech skills while learning legal skills

How Expert Witness is different than other consulting

IEEE-CNSV
Consultants' Network of Silicon Valley

- Need is very narrow:
    - Very specific to technology in patents.
    - May include multiple areas of expertise: e.g. Wi-Fi protocols and WI-Fi radios
- Limited assignments
    - Hours may be less, but case stretches out longer
    - Often no follow-on work when case concludes
- More geographically diverse
    - Work with attorneys all over the country.
    - Some travel, mostly for evidence review, depositions, trials
- Crazy schedule
    - Ever changing schedules, Last minute emergencies

Getting Paid

IEEE-CNSV
Consultants' Network of Silicon Valley

Expert Invoices Client (usually attorney or broker)

Invoice payment much slower

- Typically, 60-90 days
- Usually, invoice goes through multiple layers:
  - Broker → Attorney → Client → Attorney → Broker → Expert
    - » They each may have processing schedules e.g. billing once/month
  - Expert is lowest priority payee

Exception: Structure agreement to be paid in full before some milestones

- Signing off on reports, depositions, trials
- If a case settles or is lost, may be difficult to get paid.

Marketing your services - 1

IEEE-CNSV
Consultants' Network of Silicon Valley

- Clarify your technical skills and any patent/litigation experience
  - Prepare a Curriculum Vitae (CV)
- Network with other expert witnesses
- Network with attorneys
  1. Network
  2. Network
  3. Network
- Generic advertising does not work
- Have a web site

  Need not be elaborate, but professional. Validates your existence.

Marketing your services - 2

IEEE-CNSV
Consultants' Network of Silicon Valley

- **Expert Witness Groups**

  - IEEE-CNSV

  - Forensic Expert Witness Association (FEWA) .

  - SEAK.com – books, training, referral service
    (many different experts, e.g. medical, but still useful)

- **Listing/Directory Services**
  - Pay for listing = generally poor results
  - Attorneys know how to use Google. You need to be visible.
  - Attorneys look for experts on past similar cases

Internet Presence

IEEE-CNSV
Consultants' Network of Silicon Valley

Careful Internet Presence is Important

- Project a professional persona
  - Nothing that a jury should not see – includes social media
- Good Linkedin page
- A web site – at least an “online brochure”
- Publish – tech papers - tutorials
- Participate in tech forums – answer questions authoritatively
  - be sure to include contact info

Marketing your services - Brokers

IEEE-CNSV
Consultants' Network of Silicon Valley

Expert Witness Brokers

- Client pays brokers – not the expert
  - If you need to pay broker – stay away
  - Agency makes money by padding your hourly fee. (20% or more)
- Find brokers who deal with intellectual property AND your specialty
- Look for brokers who are willing to represent newbies

Expert Witness - Example Brokers

IEEE-CNSV
Consultants' Network of Silicon Valley

- National Expert Witness Network: newnexperts.com
- Teklikon: teklicon.com
- IMS ExpertServices: expertservices.com
- Rubin-Anders: rubinanders.com
- ForensisGroup: forensisgroup.com

Summary - We talked about: The World Of the Expert Witness

IEEE-CNSV
Consultants' Network of Silicon Valley

- What a Technical Expert is
- What skills are required
- Experts analyze products and patents
- Experts help to prepare the case
- Experts write and defend reports
- Experts testify at trial
- How to get started as an Expert

Ask The Expert – Q&A Panel

IEEE-CNSV
Consultants' Network of Silicon Valley

- **Joel Williams – Presenter**

Joel Williams is an Expert Witness who has been involved in over 50 cases. He started his career at Bell Labs, and has been a consultant for over 40 years. Joel specializes in networking and Linux software. He is an IEEE Senior Life Member, and a CNSV Board Director

- **Brian Berg – Panelist**

Brian Berg is a technical consultant specializing in consumer electronics devices and data storage, including flash memory. He has been a consultant for over 40 years, and has extensive Expert Witness experience. Brian is past Chair of the Santa Clara Valley Section, past CNSV Board Chair, and is currently a CNSV Director. He is also Region 6 History Chair, and a member of the IEEE History Committee where he has worked extensively on IEEE Milestones both in Region 6 and the UK.

- **Andrew Wolfe – Panelist**

Andrew Wolfe, Ph.D. has over 25 years of experience as an expert witness in computer systems, consumer electronics, and related services. He has participated in more than 200 litigation matters, and has testified in court more than 20 times. Dr. Wolfe is an IEEE Fellow and a CNSV At-Large Director. He now teaches full time in Santa Clara University's Department of Electrical and Computer Engineering.

THANK YOU …..

IEEE-CNSV
Consultants' Network of Silicon Valley

IEEE-CNSV
Consultants' Network of Silicon Valley

"I SEE YOU GOT A 74 IN YOUR CHEMISTRY FINAL, AND STILL YOU CALL YOURSELF AN EXPERT WITNESS."

CartoonStock.com

IEEE-CNSV

NON SEQUITUR | Wiley
DO YOU SWEAR TO GIVE LONG, CONVOLUTED NON-ANSWERS TO SIMPLE, DIRECT QUESTIONS AND PRETEND YOU DON'T REMEMBER ANYTHING THAT'S VITAL?
ABSOLUTELY!
TRUTH SERUM CONFIRMATION HEARINGS
DIST. BY ANDREWS MCMEEL UNIVERSAL
©2019 WILEY INK, LTD. 2-5
WILEYINK@EARTHLINK.NET