Piezoelectricity and Ultrasonic Devices - The Cornerstone of Modern Technology

IEEE-CNSV Webinar
1/12/2020

Husain Shekhani, PhD

Founder and Lead Consultant

Ultrasonic Advisors, LLC

Introduction

ULTRASONIC ADVISORS

- Having an understanding piezoelectric materials and devices is not common

- Benefit of this presentation to the consulting community to IEEE-CNSV members

Where are piezoelectric devices?

ULTRASONIC ADVISORS

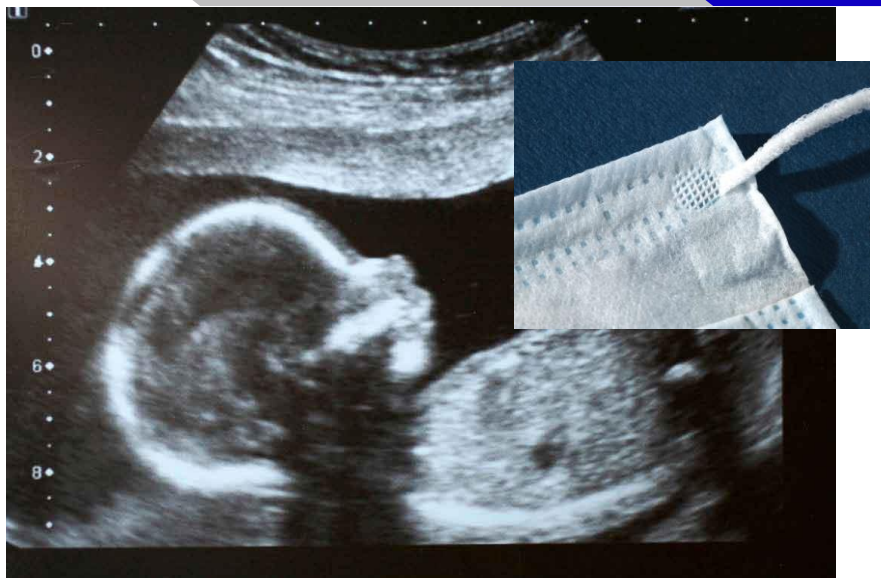

Medical

Consumer

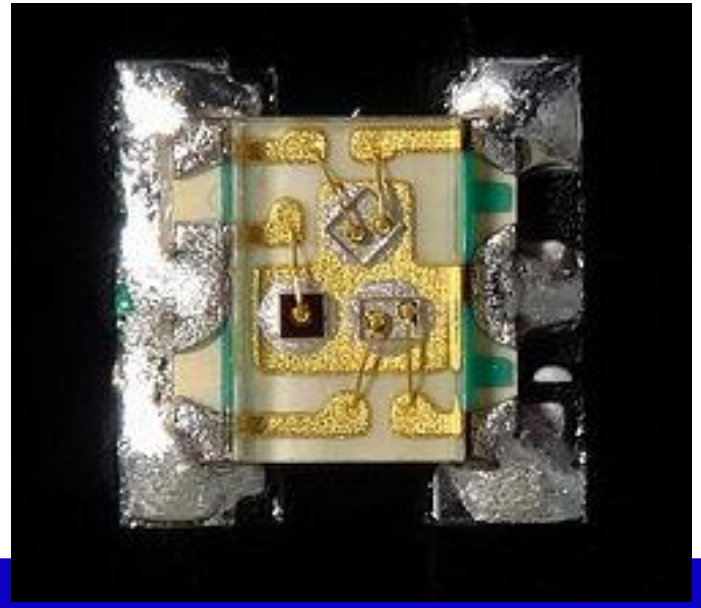

Industrial

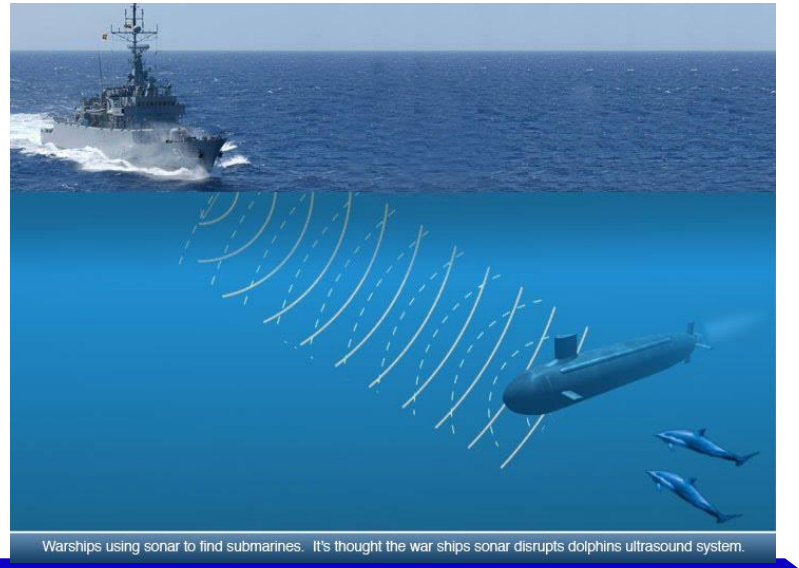

Military

Introduction

- My background
- Definition of Piezoelectricity
- Question 1 – Converse Piezo Effect
  - 0.4mm, 40um, 4um, 0.4um
  - $x = dE \quad , \Delta L = dV$

  0.4um=400E-12m/V*1E3V
- Question 2 – Direct Piezo Effect
  - 1000V, 100V, 10V, 1V
  - $Q = dX$, or $E = g\ X$
  - $V = \frac{gF}{A} L$
  - 1800V =30E-3[Vm/N] 750 [N] 0.004 [m]/ 5E-5 [m^2]
  - 6.8E10N/m^2/(750N/5E-5m^2)
  - 0.5um

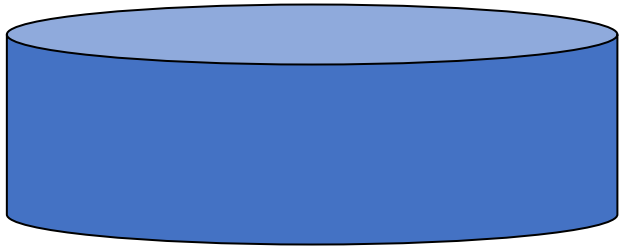

L

Piezo vs. Condenser Microphone

Piezoelectric

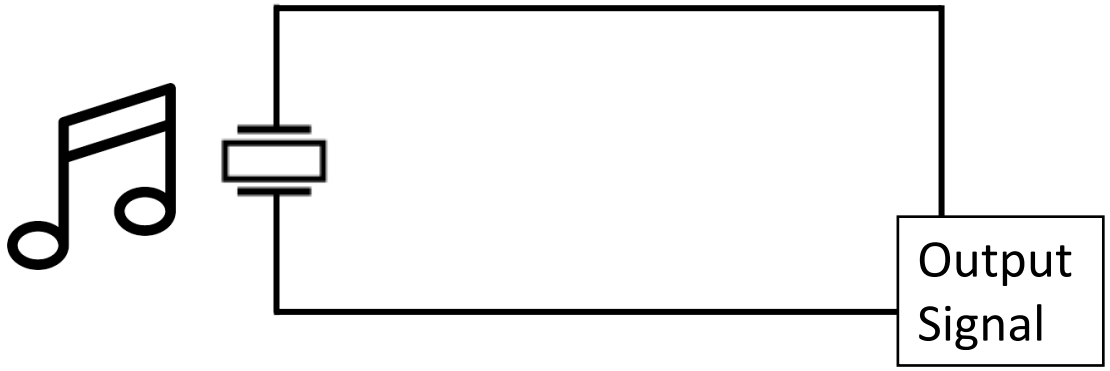

Condenser Microphone

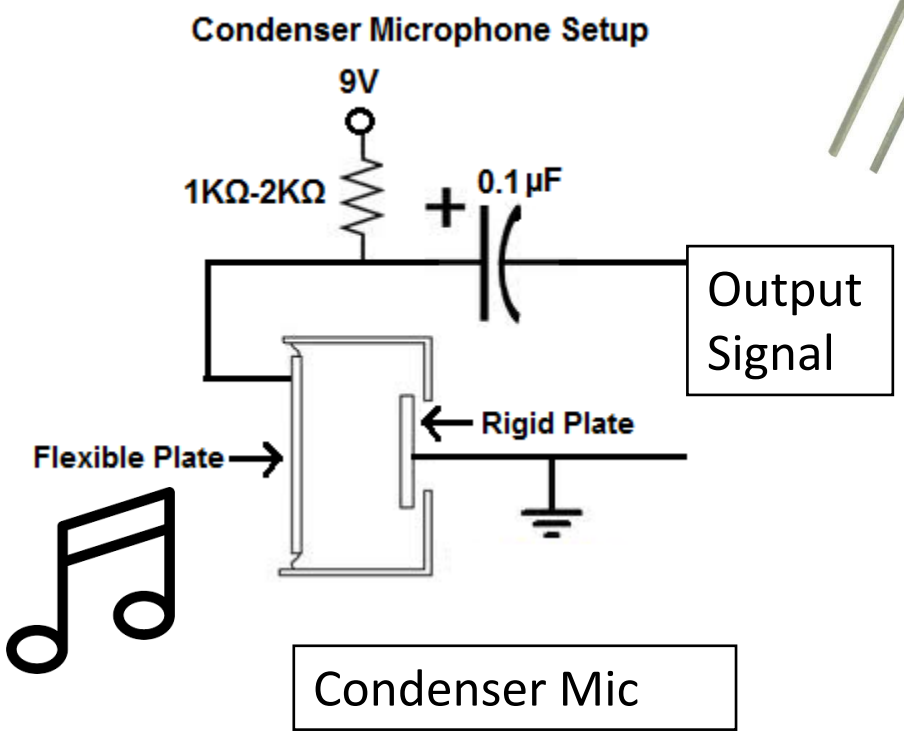

Piezoelectric materials have an internal polarization

That’s why they are piezoelectric

Origin of Piezoelectricity

ULTRASONIC ADVISORS

NaCl

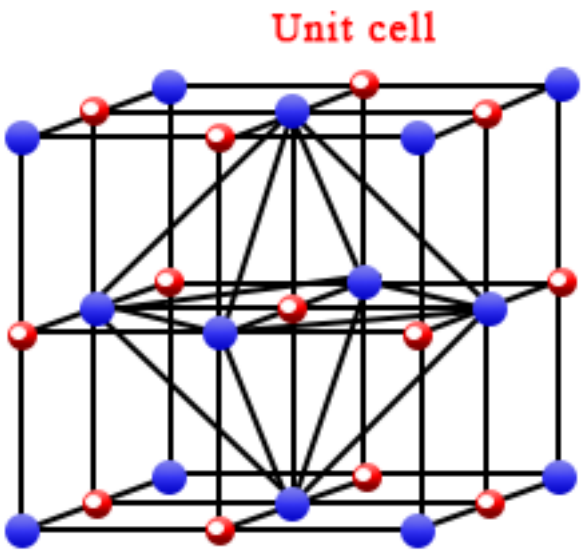

Pb(Ti,Zr)O3

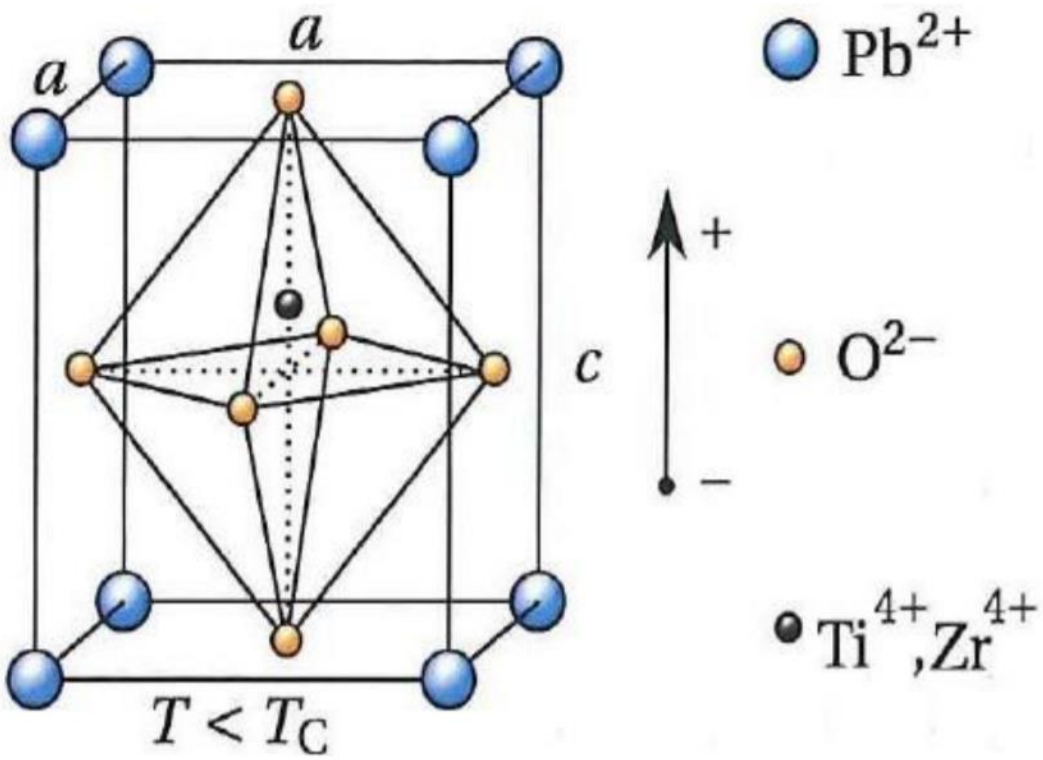

Piezo Vs. Electromagnetic

ULTRASONIC ADVISORS

Piezo

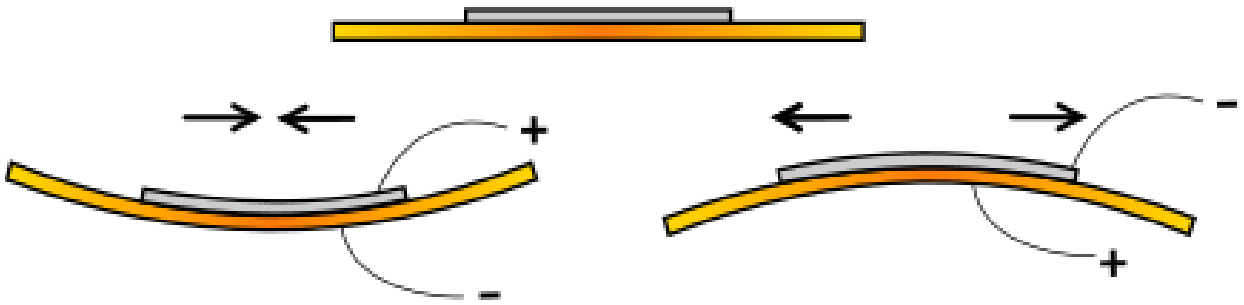

Electromagnetic

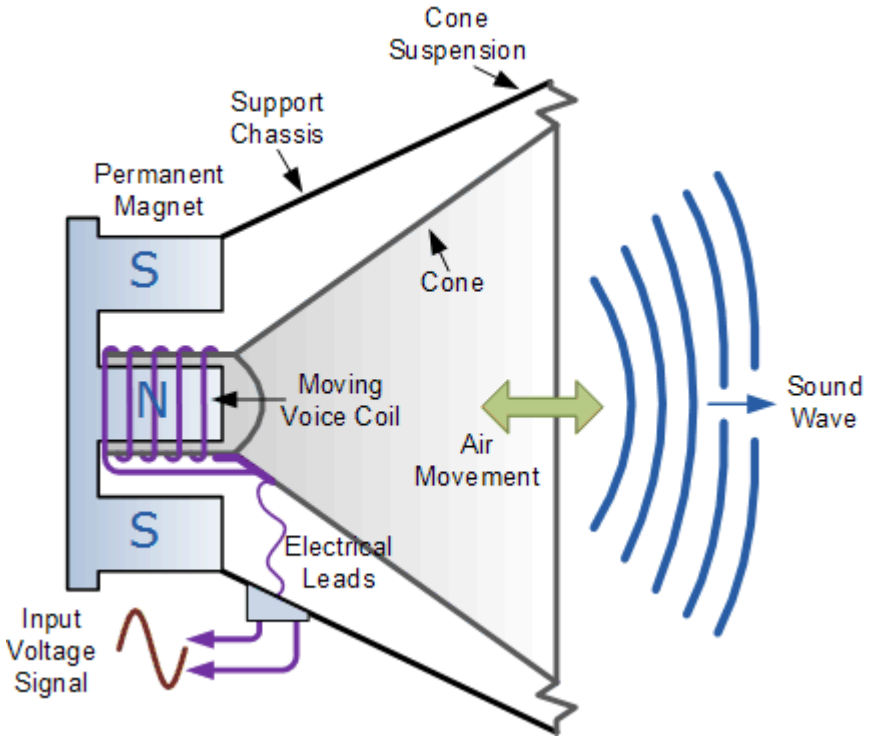

Piezoelectric materials provide a compact form factor

- Practical benefits of form factor
- Important to ultrasonic applications

Assorted Applications

Application	Aspect of Piezo Utilized
Non destructive testing (NDT)	High frequency ultrasound
Ultrasonic cleaner	Power ultrasound
Dental equipment	Ultrasonic mechanical resonance
Atomizer	Ultrasonic mechanical resonance, Ultrasound
Pressure sensor	Direct piezoelectric effect
MEMS sensors	Clean room fab
Inkjet printer	Fast mechanical response
Diesel fuel injector	Fast mechanical response with high force
Manufacturing (drilling, bonding, welding)	Ultrasonic mechanical resonance
Nano and Micro positioning	Converse piezo response, fine displacement

4 Quadrants of Force and Displacement

ULTRASONIC ADVISORS

• Bending actuators • Compliant mechanism coupled • Piezo polymer High Displacement Low Force	• Multilayer actuators • Ultrasonic resonator High Displacement High Force
• Not relevant Low Displacement Low force	• Bare Piezo Crystals Low displacement High Force

Types of Ultrasonic Transducer Applications

- A: Devices in which the goal is ultrasound
  - Medical diagnostic
  - Ultrasonic welding
  - Phaco handpieces
- B: Devices in which the goal is not ultrasound
  - Ultrasonic motors
  - Piezoelectric transformers

Different Types of Piezoelectric Materials

- “Crystals”
- Ferroelectric ceramics
- Ferroelectric single crystals
- Polymer
- Composites

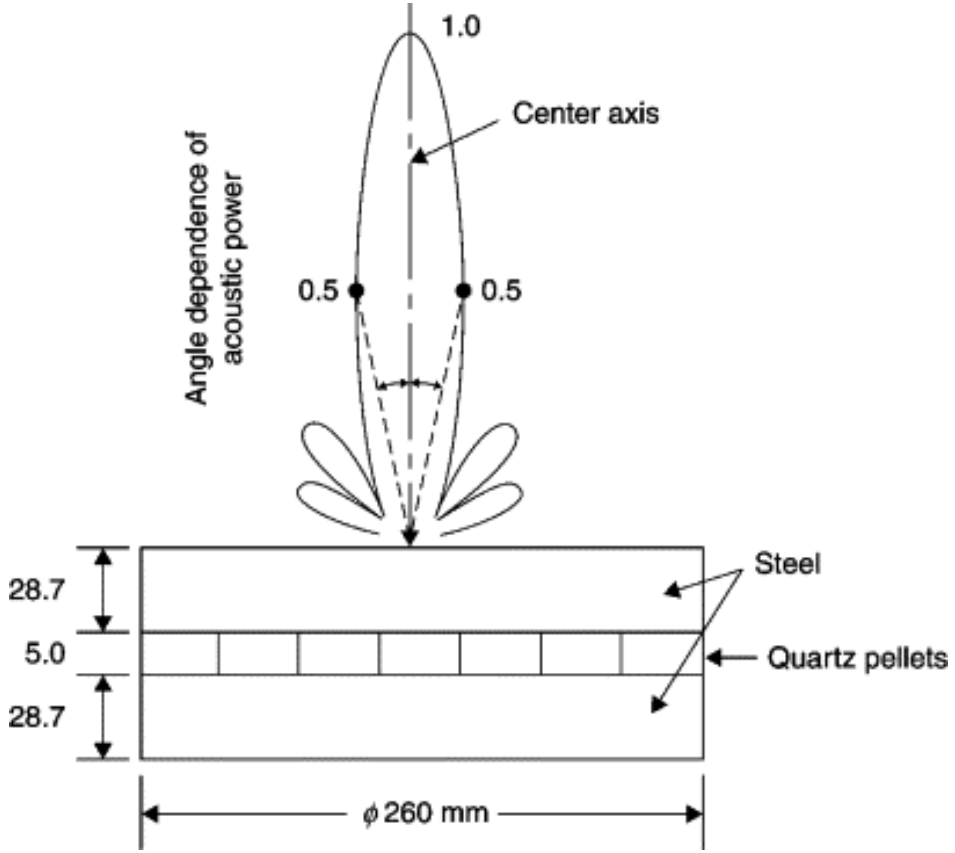

First piezoelectric applications used “crystals”

Lead Zirconate Titanate "PZT"

- Material used in majority of piezoelectric devices
- Ceramic (ionic compound)
  - Basic fabrication process
- Ferroelectric
- Properties can be tailored using defect chemistry
  - Link to Piezo Materials

Mixing the raw materials
↓
Roasting
↓
Milling
↓
Granulating
↓
Pressing (isostatic press)
↓
Thermal processing
Sintering at 1000 ^{o}C to 1300 ^{o}C
↓
Grinding, surface grinding, ultrasonic drilling, diamond sawing
↓
Electrode application
↓
Polarization

Ferroelectricity

- Explicit definition
- What is practically means for us?
  - 1. Poling
  - 2. Large spontaneous polarization
  - 3. Ferroelectric domain walls
  - 4. Temperature sensitive

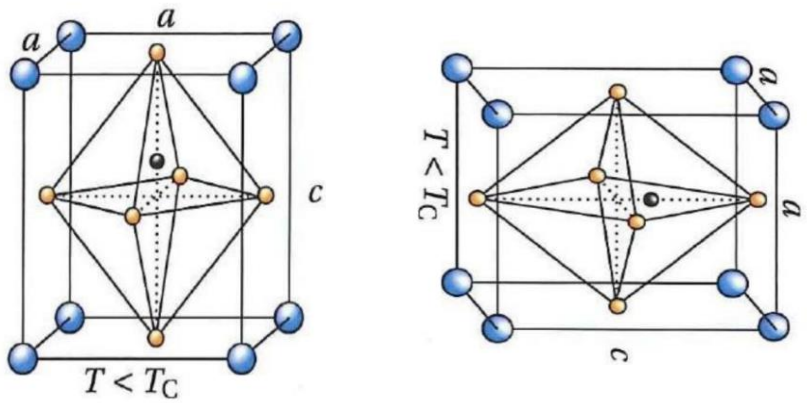

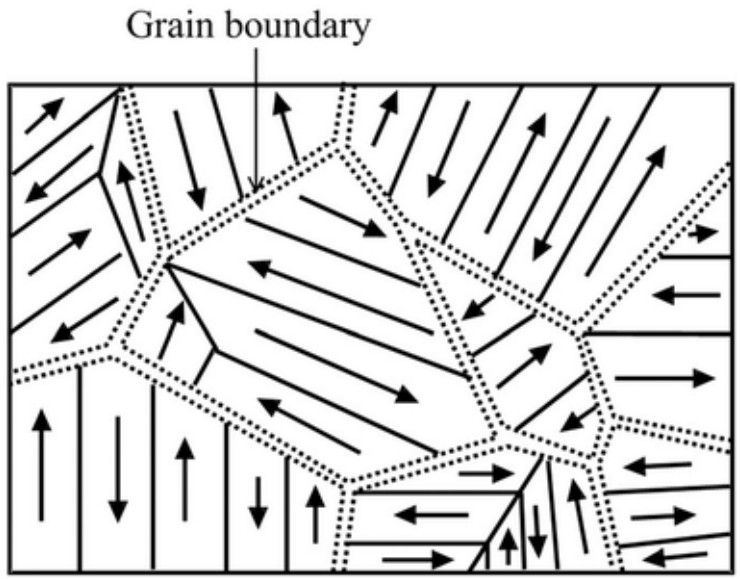

"Domains, we can't live with them and we can't live without them"

-A piezoelectric device engineer

- Piezoelectric Device Design

Ultrasonic resonance transducer

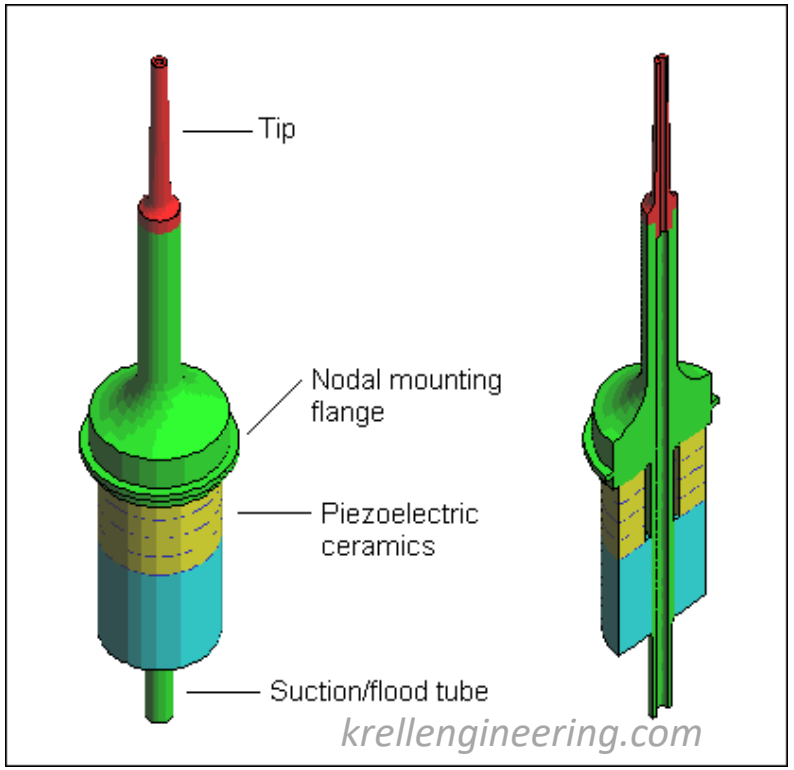

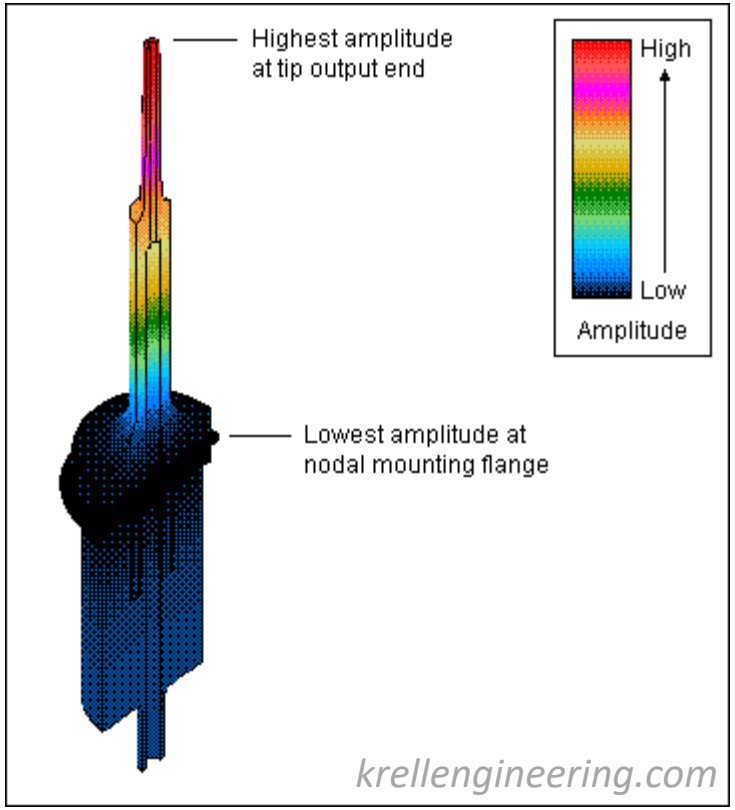

Oscilloscope Demonstration

ULTRASONIC ADVISORS

Transducer – Mechanical Impulse

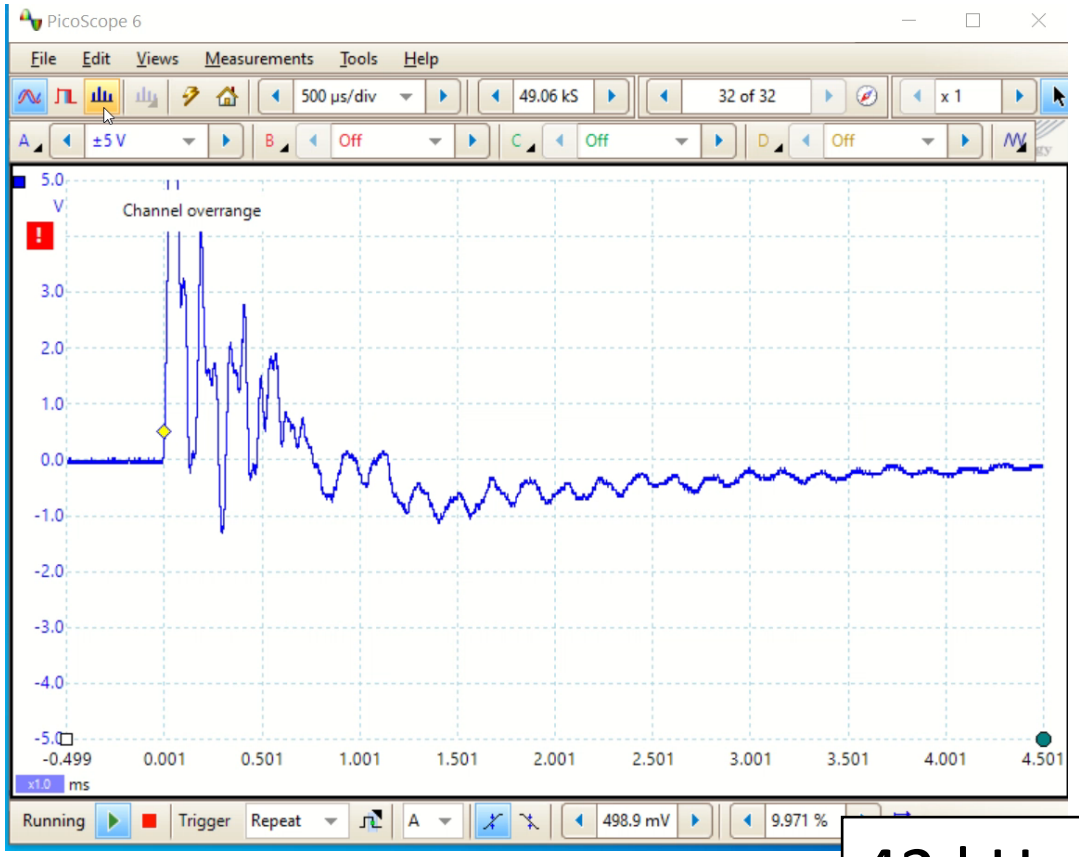

Transducer – Electrical input

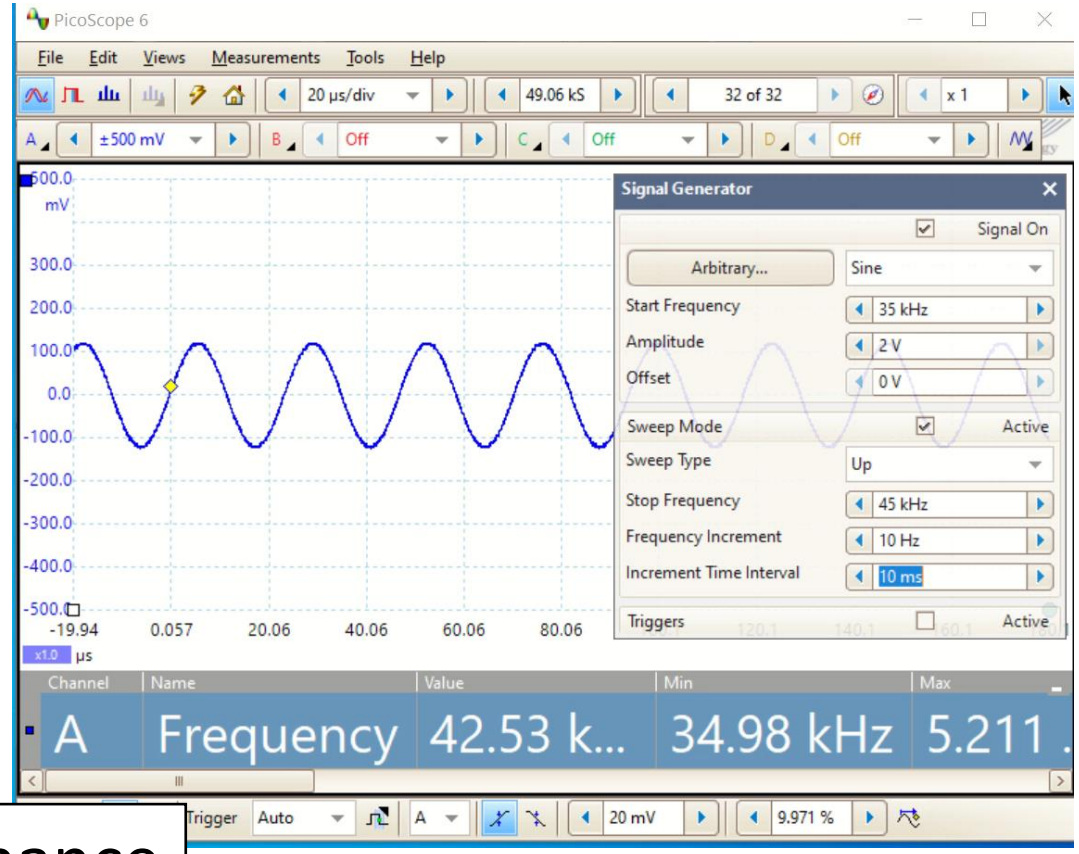

42 kHz resonance

Piezoelectric Applications

- Ignitor
  - Charge=Force * d
  - Drop the capacitance of the piezo by making it thicker
  - Q=CV
    - Large voltage

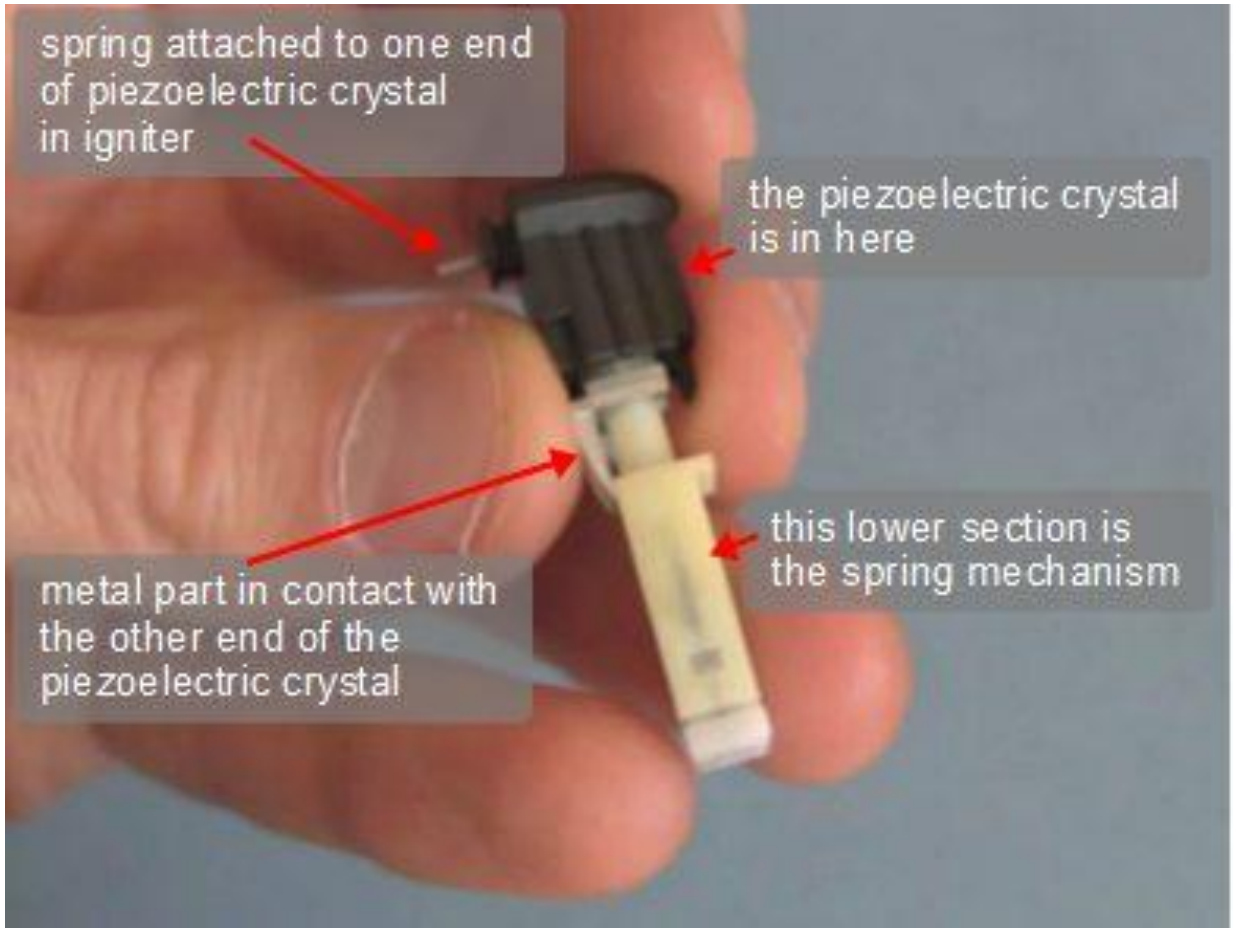

Bending Transducer

- Bond thin piezo layer to a passive layer
  - Piezo expands and device bends
  - Produces large displacement and low force
  - Slow response time
- Positioning applications, buzzers, atomic force microscopy, sensors, ultrasonic motors

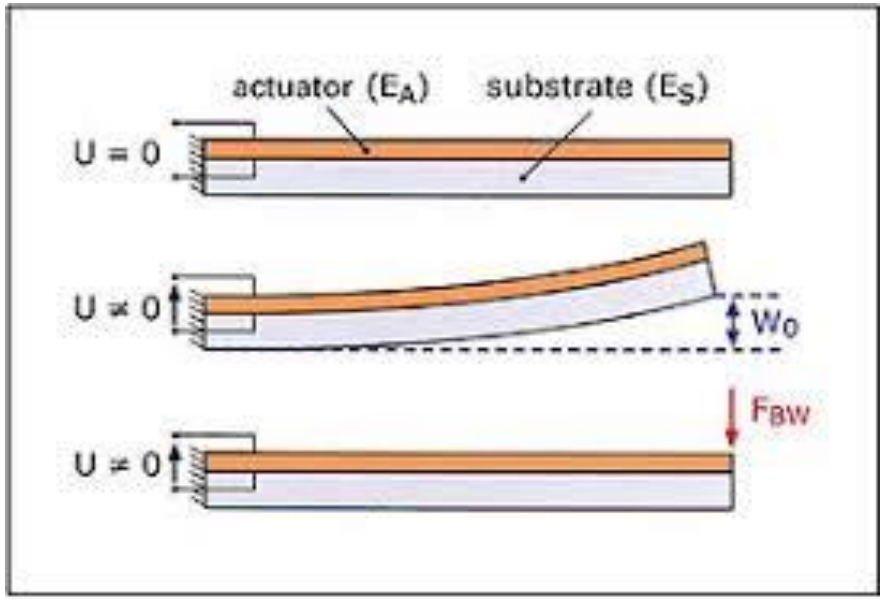

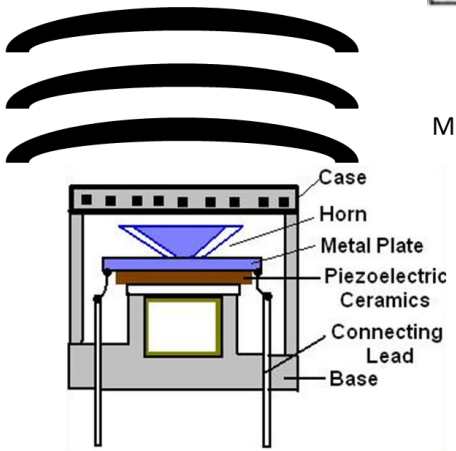

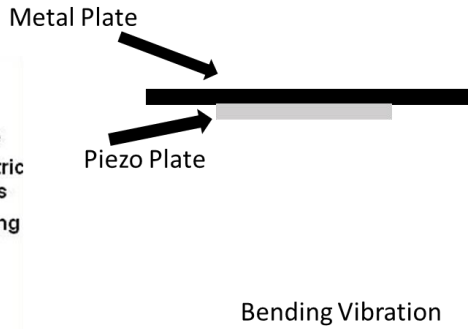

Multilayer Piezoelectric Device

- Electric field drives piezoelectricity
  - Not voltage
- Make layers thinner
  - Producing larger electric field for same voltage

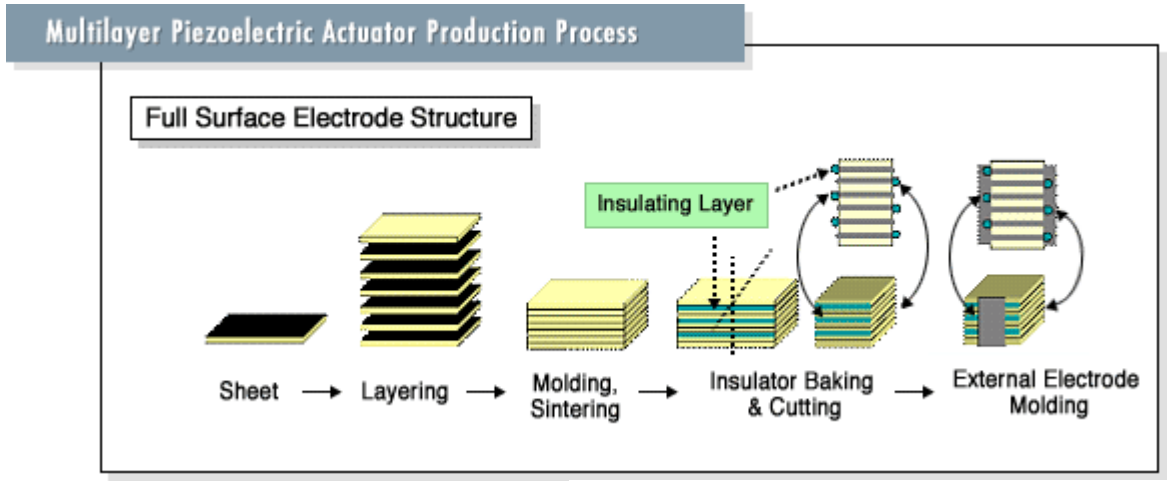

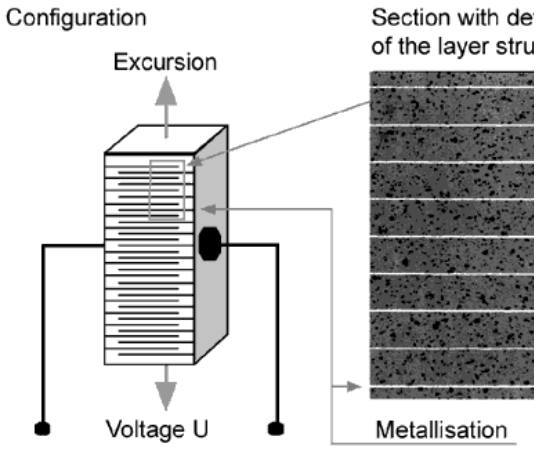

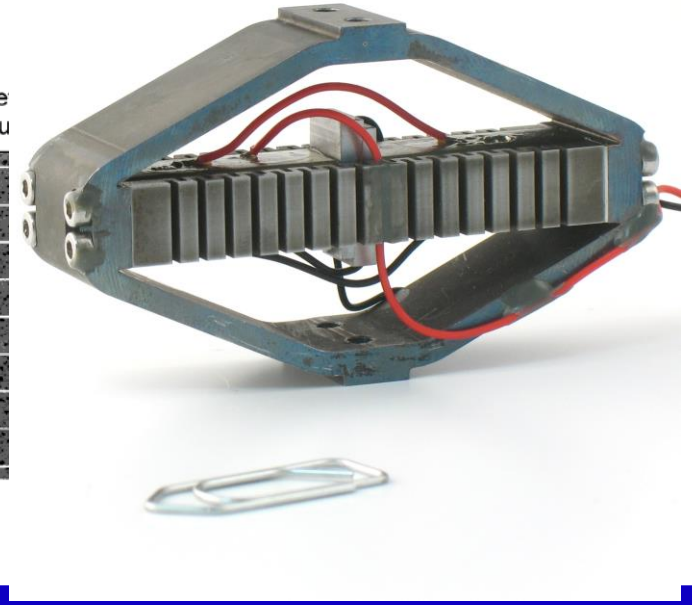

Industry Trends

ULTRASONIC ADVISORS

- Lead free piezoelectric materials

- More and more new inventions, some examples:
  - Ultrasonic knife for consumer use
  - Ultrasonic surgical for damaged tendon growth
  - Electronics cooling
  - Cell processing

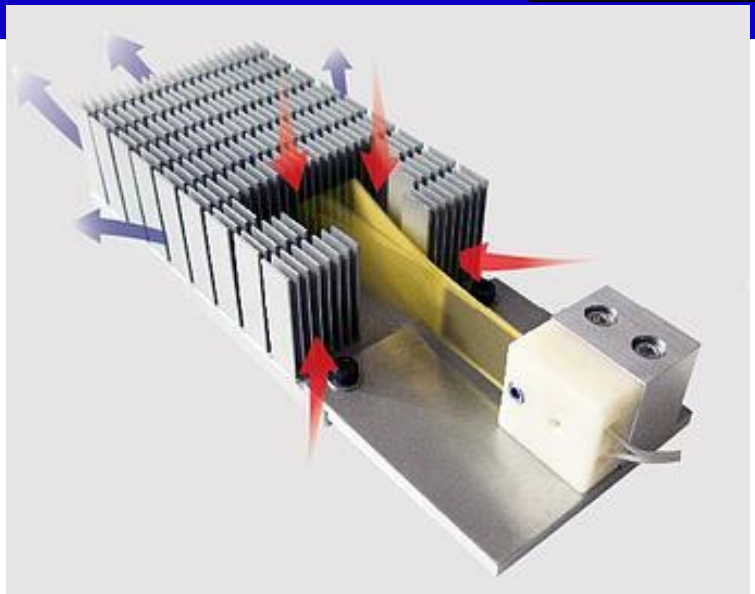

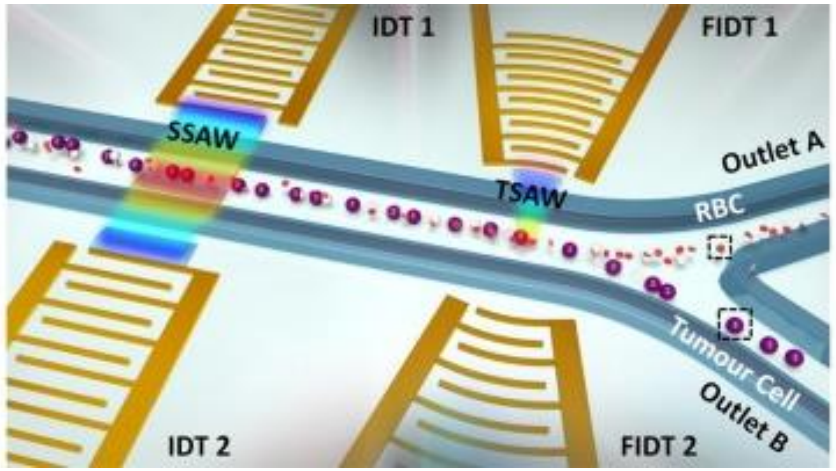

About Ultrasonic Advisors

- Founded in 2019
- Expert advisory services to teams developing ultrasonic device products
- Past and active application areas
  - Atomizer, ultrasonic surgical transducers, ultrasonic motors, IOT sensors, various medical devices, portable ultrasonic devices
- Expertise in
  - Material selection, property characterization, mechanical design and analysis, electrical/circuit design and analysis, finite element simulations, device characterization, device optimization, and software and hardware development
- Best way to get in touch
  - Consultation call, email, email list

ULTRASONIC ADVISORS

www.ultrasonicadvisors.com