IEEE-CNSV
Consultants' Network of Silicon Valley

ELECTRIFY THE WORLD

MicroElec Technical

Zahir Ahmed
CEO
10/8/2019

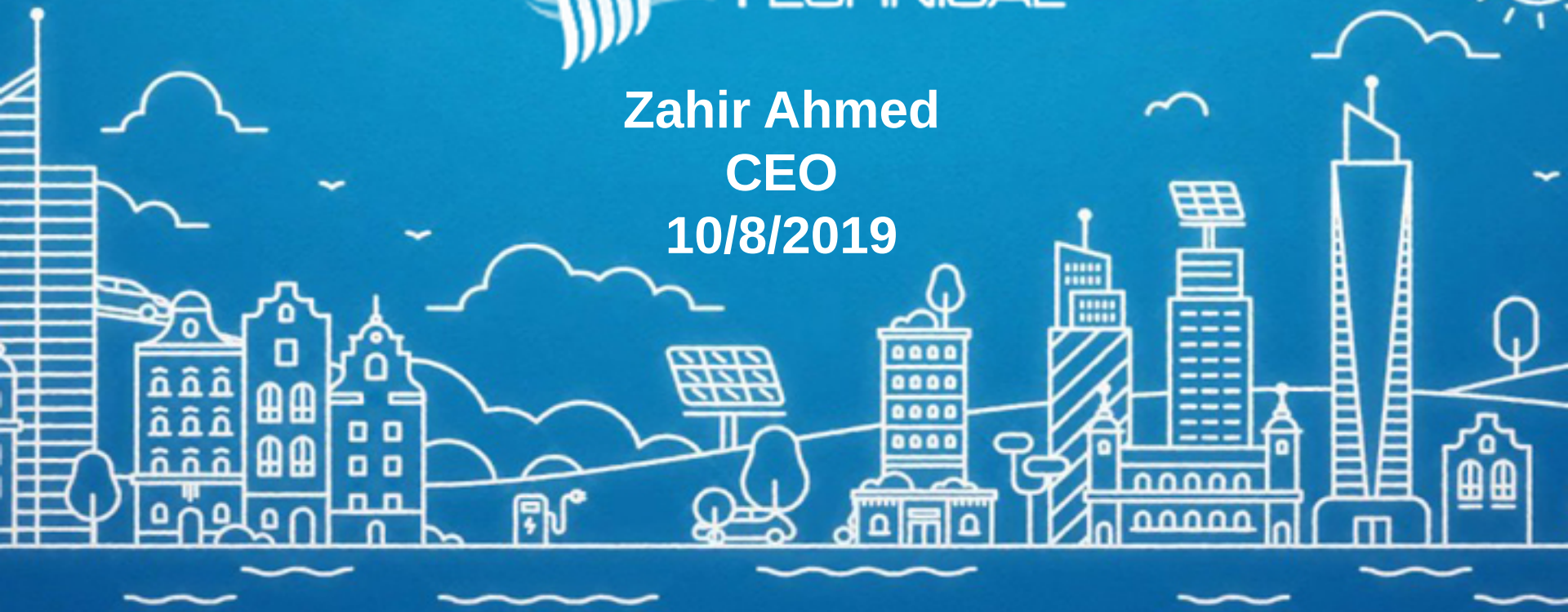

ABOUT US

MicroElec Technical is a representative of globally renowned Micro Electronics, Engineering, and Technology manufacturers. We provide critical design and functionality support to leading OEMs through advanced technology, quality components, and creative engineering solutions.

Over the years, we have gained experience developing reference design and technical knowledge in system design and architecture, wireless/RF, signal integrity, hardware, PCB layout, DSP/FPGA/ASIC, software/firmware, and mechanical design.

MicroElec Technical

AGENDA

Types of EV's

The Components of an EV system

How the components fit together in a sub system

How the subsystems convert electric power into motive force for vehicles.

TYPES OF VEHICLES

Conventional

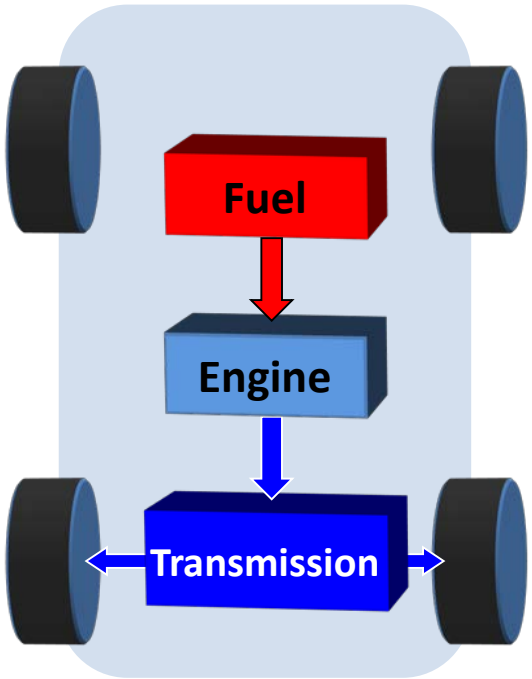

Hybrid

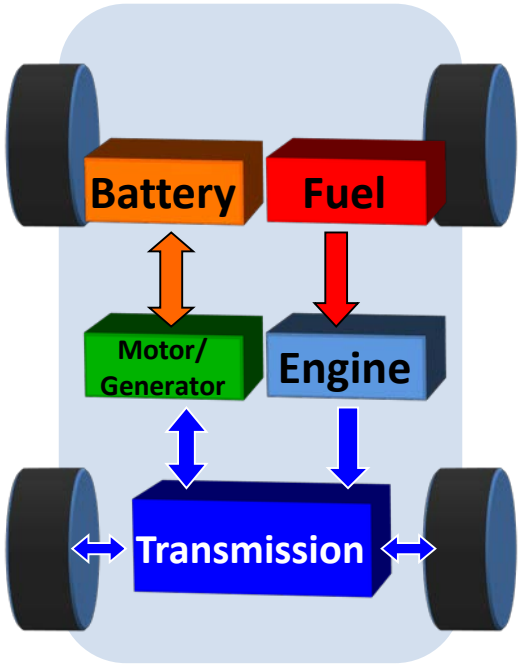

Battery Electric

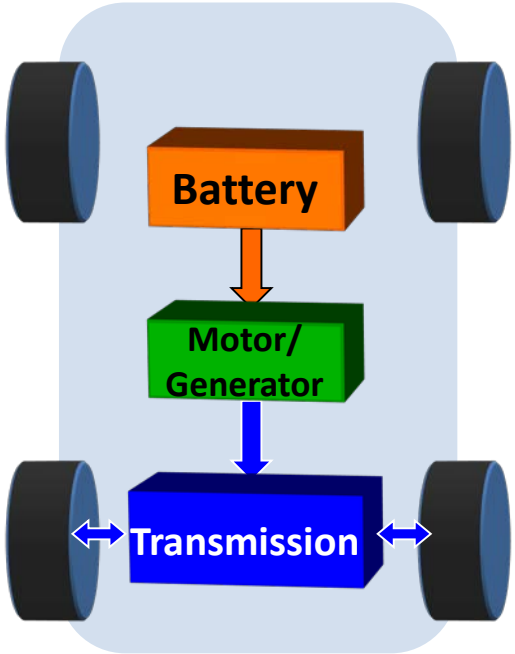

Electrification

MicroElec Technical

ELECTRIC VEHICLE ARCHITECTURE

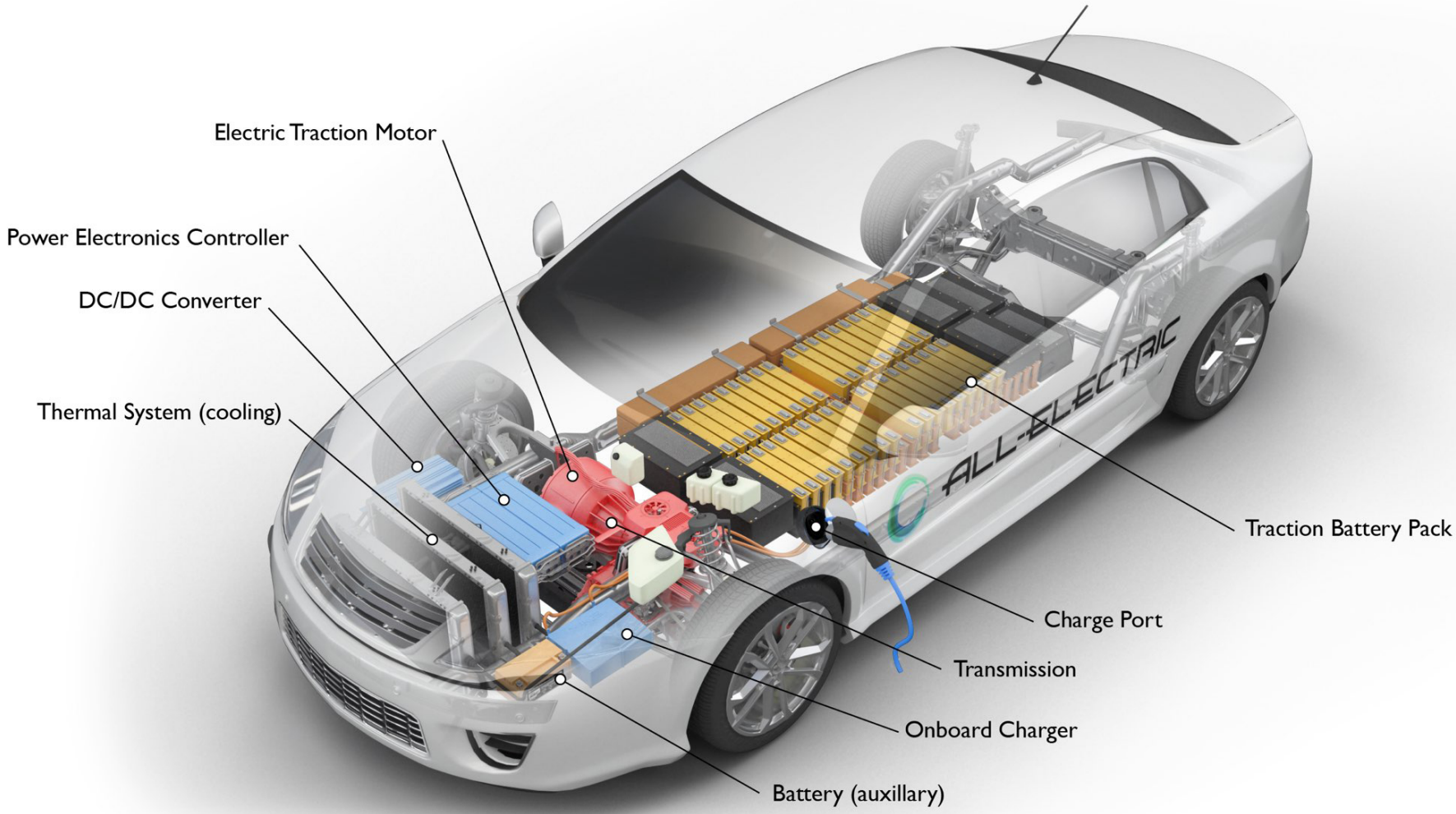

MicroElec Technical

Components of the EV

Charger >> BMS & Batteries >> Inverter >> Motors

DC/DC

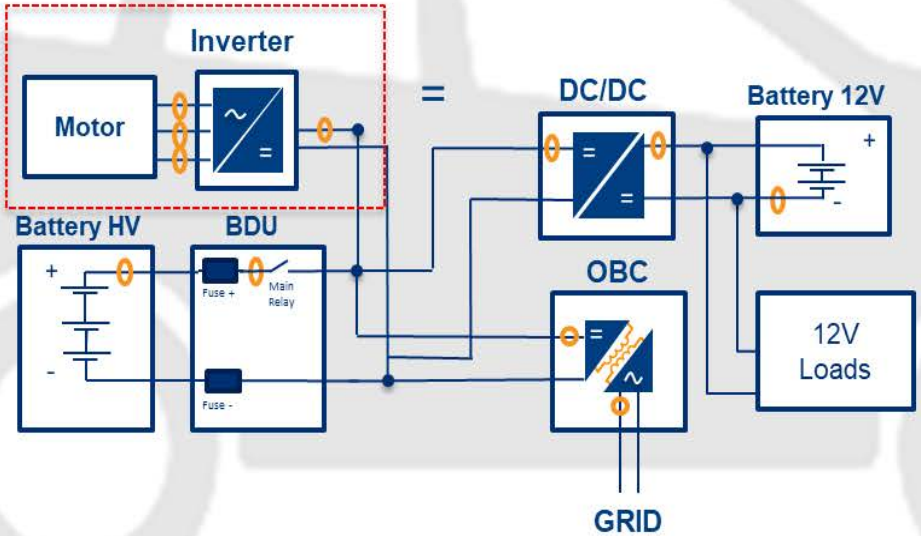

Three Main Types of EV Charging

1. Rapid chargers use either AC or DC Current. Rapid AC chargers are rated at 43 kW while most Rapid DC units are at least 50 kW. Both types will charge the majority of EVs to 80% in around 30-60 minutes (depending on battery capacity). Tesla Superchargers are Rapid DC and charge at approximately 120 kW.

2. Fast chargers include those which provide power from 7 kW to 22 kW, which typically fully charge an EV in 3-4 hours.

3. Slow charge units (up to 3 kW) are best used for overnight charging and usually take between 6 and 12 hours for a pure-EV, or 2-4 hours for a PHEV. EVs connect to these devices with a cable using a 3-pin or Type 2 socket.

VEHICLE	PACK SIZE (kWh)	120V, 15A 1.8 KW Standard Household	220V, 50A 11 KW Standard Household	220V, 200A 44 KW Custom Household	480V, 400A 330 KW* Standard Industrial	480V, 1000A 830 KW* Custom Industrial	Battery Buffer Bank ∞KW Custom
Bicycle / Scooter	0.5	◉	●	●	●	●	●
Mobility Chair	1	◉	●	●	●	●	●
Golf Cart	3	○	◉	●	●	●	●
Motorcycle (60 mi)	5	○	◉	●	●	●	●
Forklift	20		○	◉	●	●	●
Sedan (100mi)	30		○	◉	●	●	●
Sedan (200mi)	60		◌	○	●	●	●

*Three phase AC power, which is calculated using $P = VI(3)^{1/2}$

Charging Time Key: ◌ C/8 (Overnight) ◉ 1C (One Hour) ○ C/4 (Four Hours) ● 6C (10 Minutes)

MicroElec Technical

BMS and Evolution in Lithium-Ion Batteries

BMS is an electronic regulator that monitors and controls the charging and discharging of rechargeable batteries. measure voltage and stop charging when the desired voltage is reached. At that point, they might shut down the power flow; in the event of irregular or dangerous conditions they might issue an alarm. A more complex BMS monitors many factors that affect battery life and performance as well as ensuring safe operation. They may monitor one-cell or multi-cell battery systems. Multi-cell systems may monitor and control conditions of individual cells. Some systems connect to computers for advanced monitoring, logging, email alerts and more.

Factors monitored and controlled by battery management systems include:

- Main power voltage.
- Battery or cell voltage.
- Charging and discharge rates.
- Temperatures of the batteries or cells.
- Battery and cell health.
- Coolant temperature and flow for air or liquid cooling.

BMS and Evolution in Lithium-Ion Batteries

- Tesla is producing a 74 kWh 'long range' battery pack, which consists of 4416 cells. The cells are distributed evenly among 4 modules and further divided into bricks with 46 cells per brick . Below is a diagram of the distribution of the cells in a Model 3 battery pack

- The battery pack includes the charger, fast-charge contactors, and DC-DC converter all in the same package

- Battery cells need to operate at a temperate core temperature in order to keep their optimal performance. This means that they need to be cooled in warm conditions and heated in cold weather.

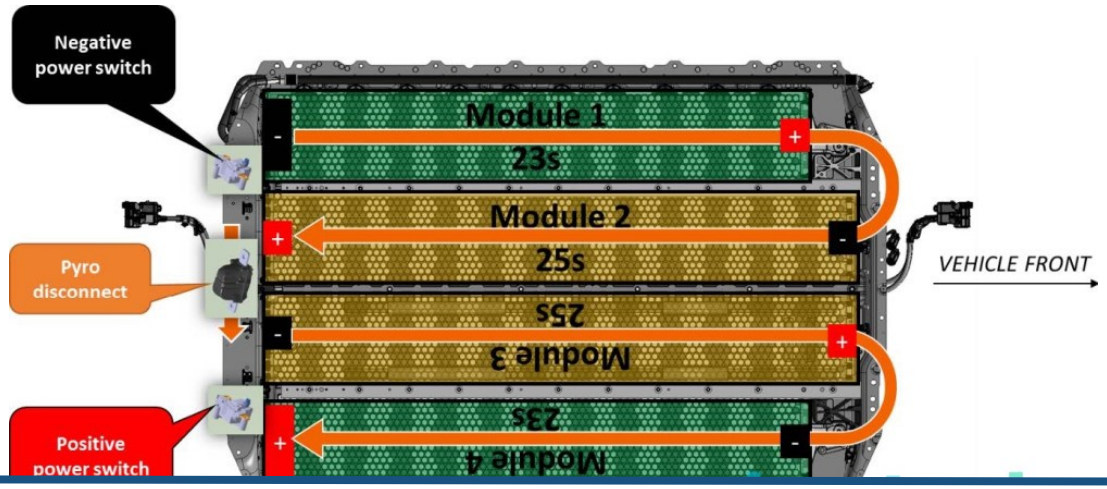

Inverter

- The inverter controls the electric motor. This is a key component in electric cars as, similar to the Engine Management System (EMS) of combustion vehicles, it determines the driving behaviour.

- A drive inverter in an electric vehicle is used to convert DC current from the battery pack into AC current for the motor. It's an essential component of any electric powertrain using an AC motor because its power rating limits the output to a motor and its efficiency affects energy consumption.

- Tesla Model 3 inverter is 300kW. Input is 300VDC - 800VDC and is converted to AC.

- Inverter varies amplitude of AC Power to control power output to the motor.

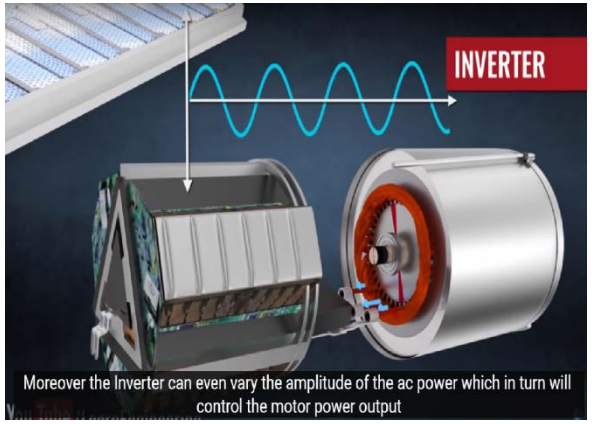

Induction Motor

- An induction motor or asynchronous motor is an AC electric motor in which the electric current in the rotor needed to produce torque is obtained by electromagnetic induction from the magnetic field of the stator winding.[1] An induction motor can therefore be made without electrical connections to the rotor.[a] An induction motor's rotor can be either wound type or squirrel-cage type

- Has a three-phase, four-pole AC induction 416 hp (310 kW) and 443 ft·lb (601 N·m) rear-mounted electric motor with copper rotor. The base model uses a 362 hp (270 kW) and 325 ft·lb (441 N·m) motorHorseo. Power 258 to 271 hp

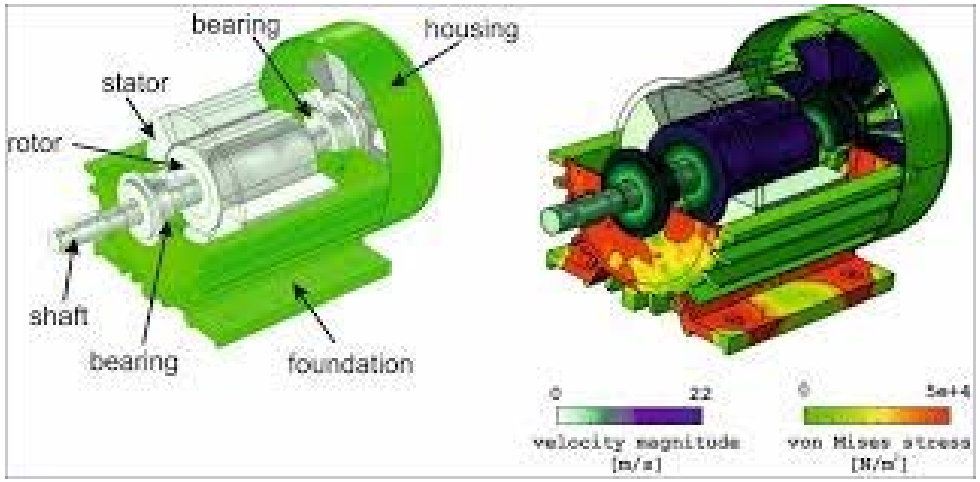

Induction Motor

- Three-phase squirrel-cage induction motors are widely used as industrial drives because they are self-starting, reliable and economical. Single-phase induction motors are used extensively for smaller loads, such as household appliances like fans. Although traditionally used in fixed-speed service, induction motors are increasingly being used with variable-frequency drives (VFDs) in variable-speed service.

Inverter Topology Highly Efficient 3-phase driver

Regardless of whether the motor is synchronous, asynchronous or brushless DC, the inverter always functions in a similar way and is controlled by an integrated PCB, which should be designed to minimize switching losses and maximize thermal efficiency. Not only does the inverter drive the electric motor, but it also captures the energy released via regenerative braking and feeds it back to the battery. As a result, the range of the vehicle is directly related to the efficiency of the main inverter.

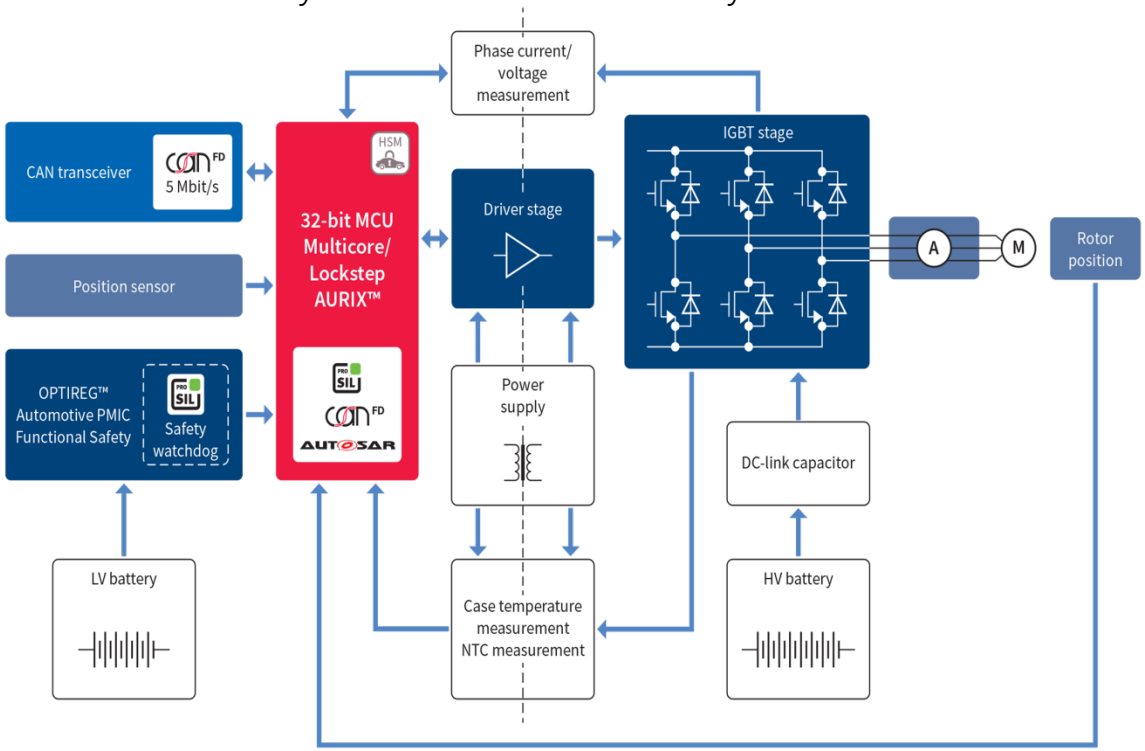

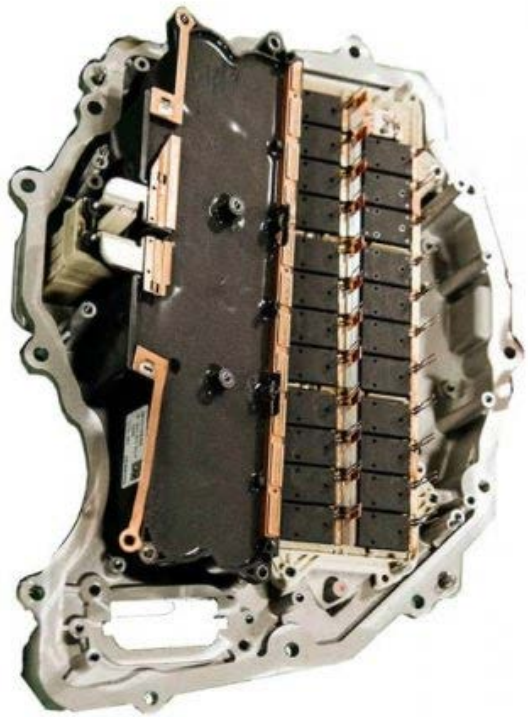

MicroElec Technical

Inverter Topology Highly Efficient 3-phase driver

- Different voltage levels are required by the various electronic components in an EV. High-voltage batteries with different voltage levels are currently available on the market. In addition, the power classes scale from 1 kW to 5 kW depending on the number of low-voltage applications. In the past, the alternator was used to supply the 12 V power supply system. n EVs and HEVs, the DC-DC converter supplies the 12 V power system from the high-voltage battery.
- Designers are called on to increase the conversion efficiency as a way of extending the range of the vehicle. Furthermore, different components may be required depending on whether the design is geared toward a uni- or bidirectional energy transfer

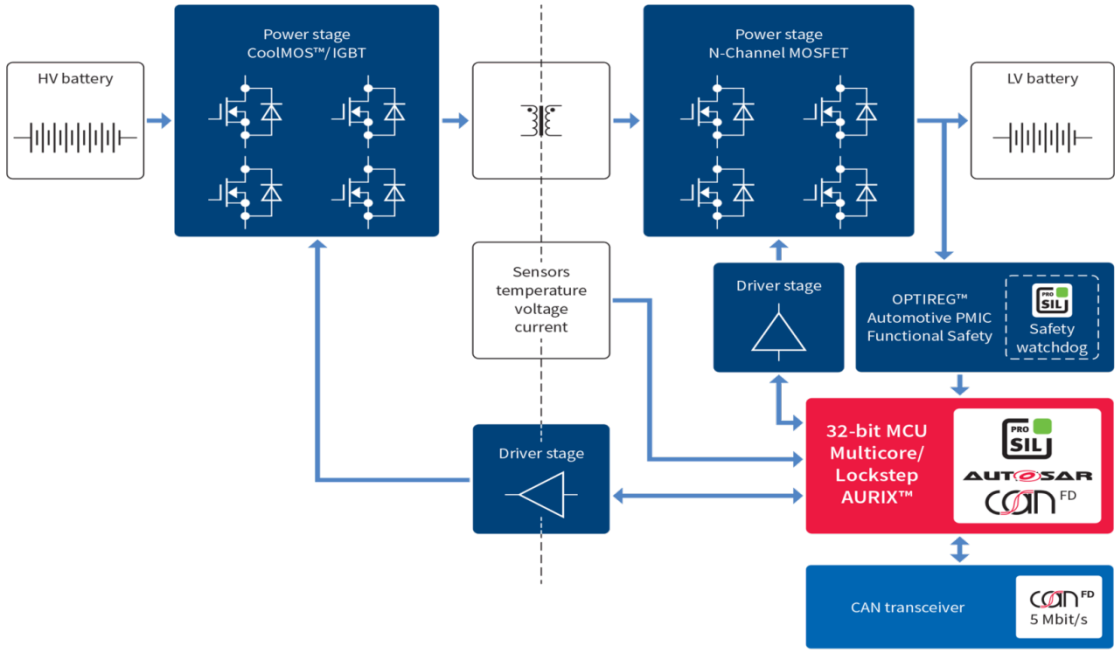

Regenerative Braking in Electric Vehicles

Concept of regenerative braking can be implemented in conventional vehicles using Fly wheels. Flywheels are disks with high inertia which rotate at a very high speed. They act as a mechanical energy storage device by taking up (storing) the kinetic energy of the vehicle during braking. The energy recovered during braking process can be used to assist the vehicle during starting or up-hill movement.

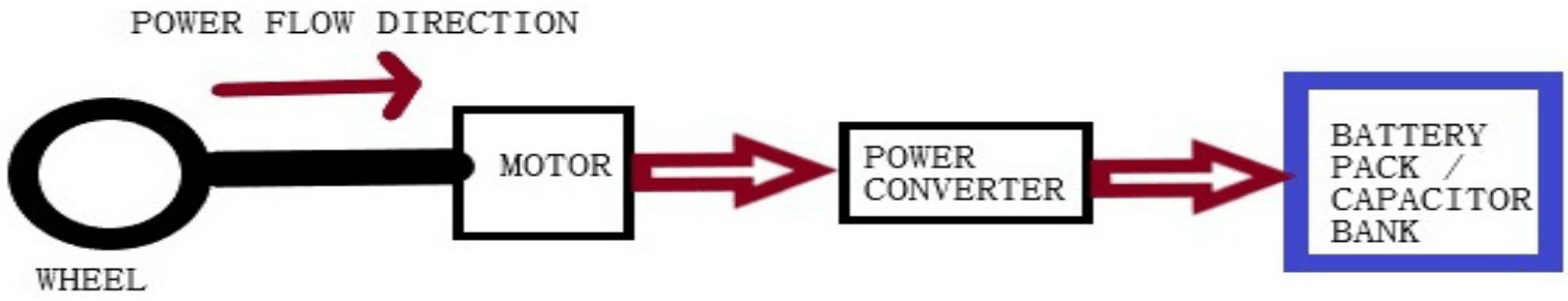

Regenerative Braking in Electric Vehicles

In electric vehicles, we can incorporate the regenerative braking in a much more efficient way electronically. Though the average speed of the vehicle in the urban drive cycle is around 25-40 kmph, the frequent acceleration and braking drain the battery soon. We know that motors can act as a generator under certain conditions. By using this feature, one can prevent the kinetic energy of the vehicle from getting wasted. When we apply the brake in electric vehicles, the motor controller (based the brake pedal sensor output) reduces the performance or stops the motor. During this operation, the motor controller is designed to recover the kinetic energy and store it in the battery or the capacitor banks. Regenerative braking helps in extending the range of the electric vehicle by 8-25%. Apart from saving energy and enhancing the range, it also helps in effective control of the braking operation.

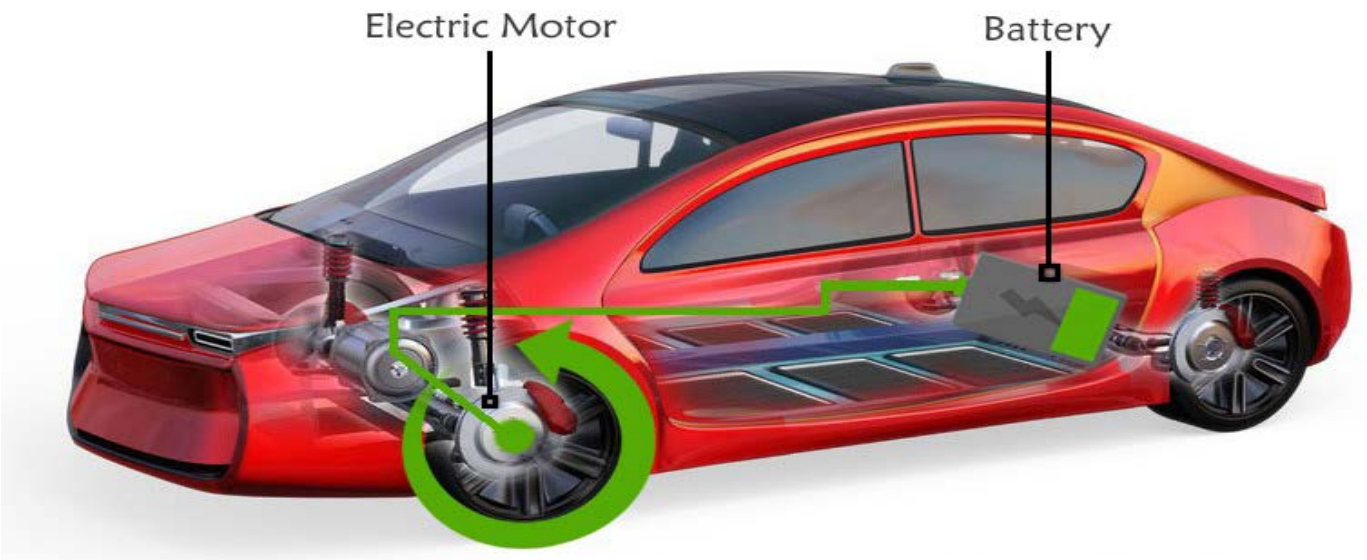

11 Chips & Sensors in Every Car

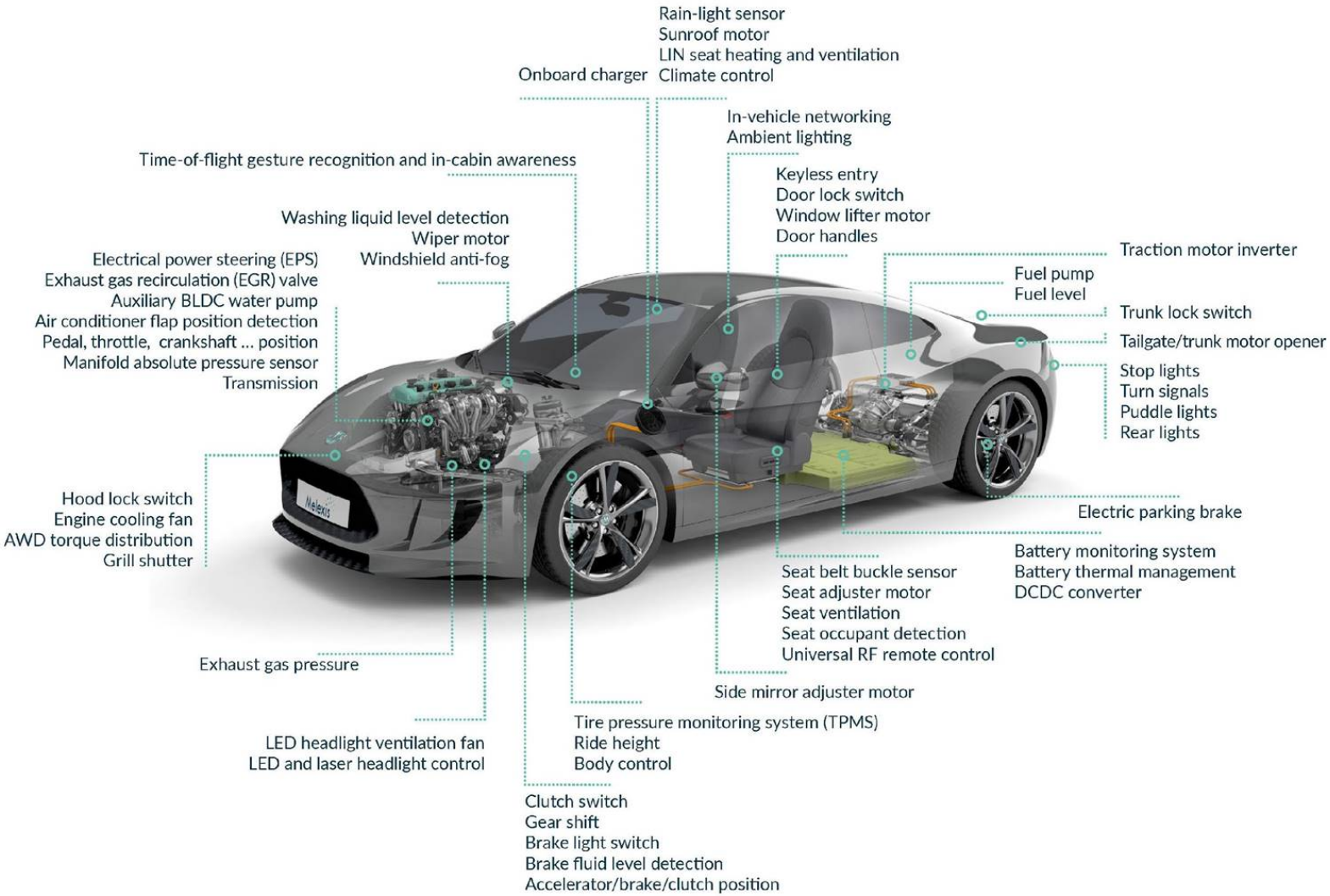

MicroElec Technical

MicroElec Technical

We look forward to working with you

Contact Us

www.microelecs.com

sales@microelecs.com

1-800-913-0720

Stay Connected