The Linley Group

Research.
Analyze.
Advise.

# Trends in Mobile Processors

Mike Demler, Senior Analyst, The Linley Group

Presentation for IEEE - December 2013

# About The Linley Group

- Microprocessor Report and Networking Report
  - Weekly online, monthly print edition.
- Guide To…
  - In-depth analysis of a specific semiconductor segment.
- Linley Tech Conferences
  - Data Center Conference: February 5 – 6
  - Mobile Conference: April 30 - May 1
  - Carrier Conference: June 10 - 11
  - Processor Conference: October 22 - 23
- Custom consulting projects

# About Me

- Senior Analyst, The Linley Group
  - Focus on mobile processors, semiconductor IP
- Senior Editor of *Microprocessor Report*
  - Recent articles: ARM, Arteris, Broadcom, CEVA, Intel, MediaTek, Spreadtrum, et al
- 15+ years in semiconductor industry
  - Datel, GE R&D Labs, MicroNetworks, Texas Instruments
- 15 years in EDA industry
  - Antrim, Cadence, Nassda, Synopsys
- Also author of…
  - *High-Speed Analog-to-Digital Conversion, The Android Invasion, The Emerging 4G Wireless Landscape in the U.S.*

# Trends in Mobile Processors

- Development of the mobile processor and Moore's Law
- Top 5 Trends in Mobile Processors
  - Functional integration
  - LITTLE.big or Big.LITTLE
  - Heterogeneous Multiprocessing
  - Dual to Quad to Octa
  - The 64-bit question
- Conclusions

# The Genesis of the Mobile Processor

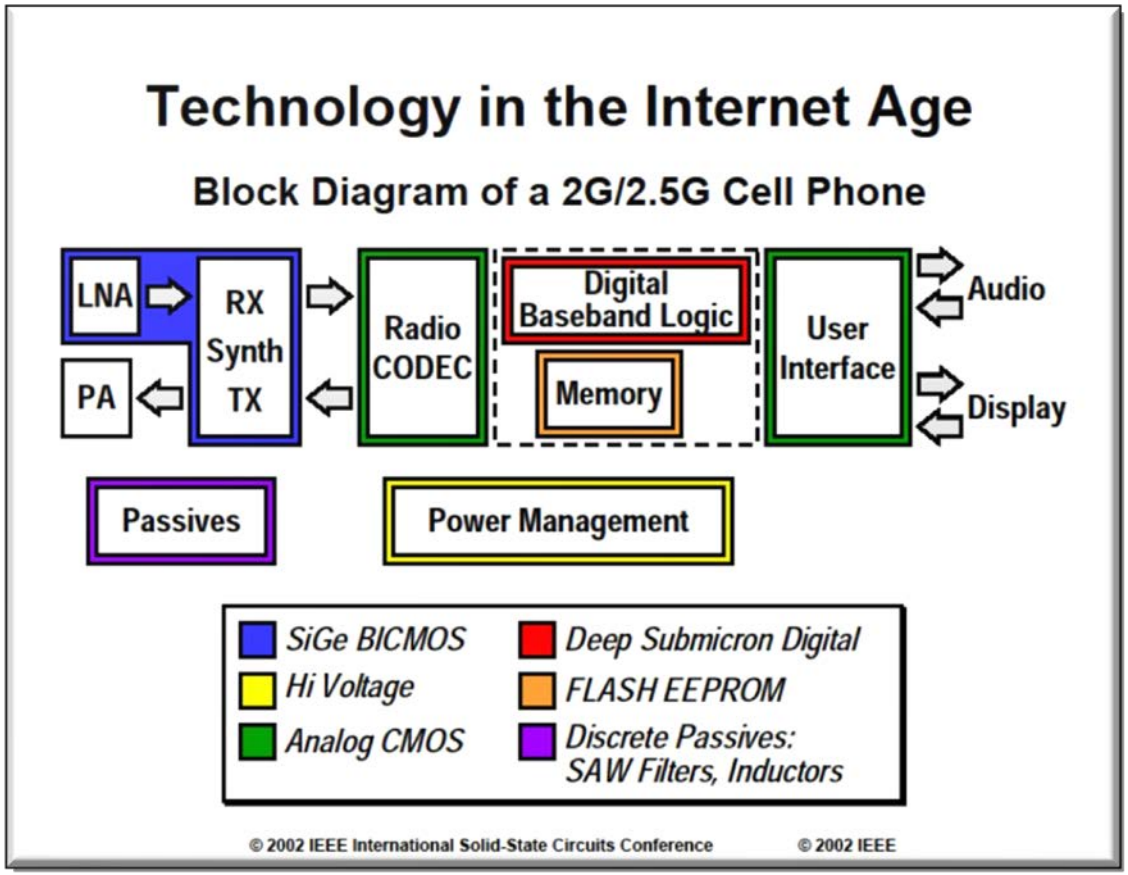


- Transition of the semiconductor industry began in 2000 – 2001.
- Sales of ICs for communications devices began to surpass PCs and computing as biggest revenue driver.

# The Genesis of the Mobile Processor

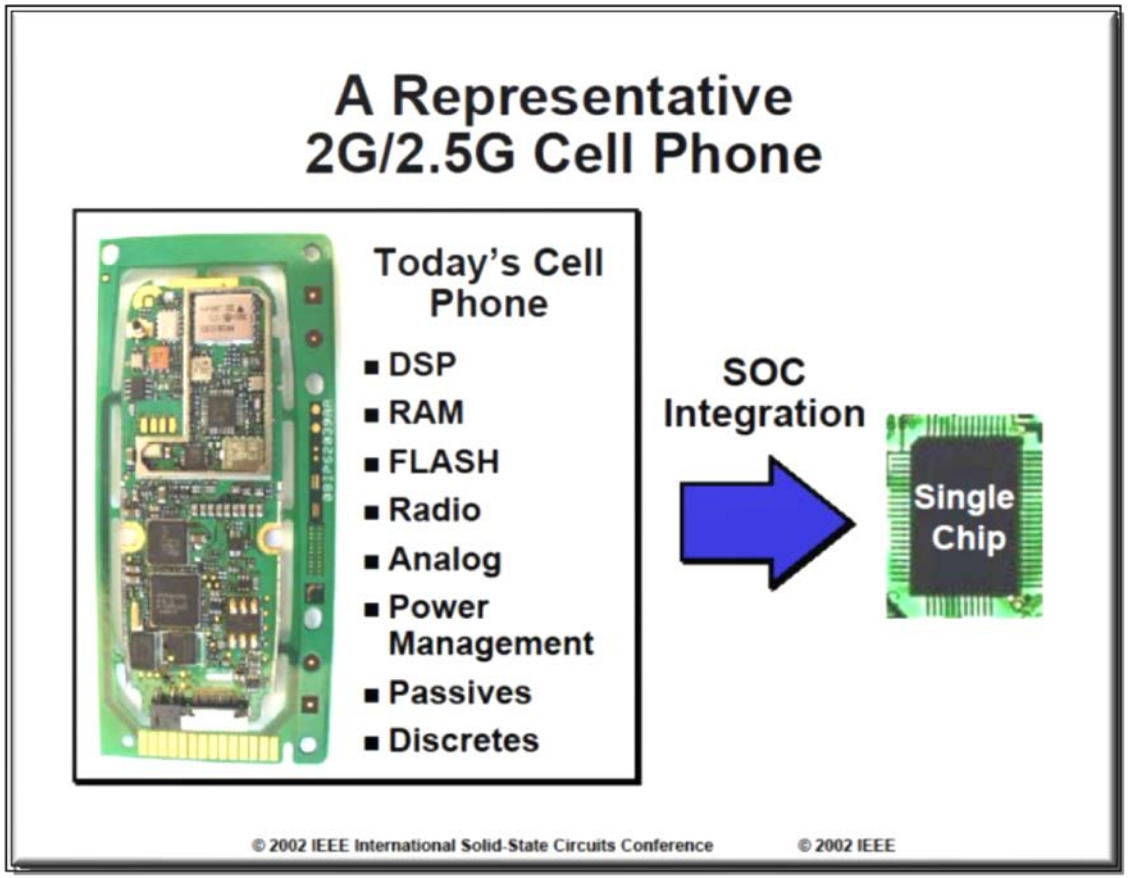


- Moore's Law was "stagnating".
- *"Transistor scaling will continue to be an important technology driver. But it will no longer be the sole driver – SOC integration will accelerate in the Internet age."* – Dennis Buss of TI, at ISSCC 2002
- The quest for a single-chip cell phone began.

# Opportunities for Mobile SoC Integration

- Initially, goal was process technology convergence
  - Reduce cost by combining analog, digital, Flash, power, RF
- But a more significant convergence was underway
  - Deployment of 3G ➔ communications converged with computing
  - The internet was going mobile
- Other personal mobile devices came to market
  - PDAs
  - Digital audio/video players
  - Camera/recorders
  - Game players
  - GPS navigation

# Opportunities Arose for Functional Convergence

# Moore's Law and Processor Technology

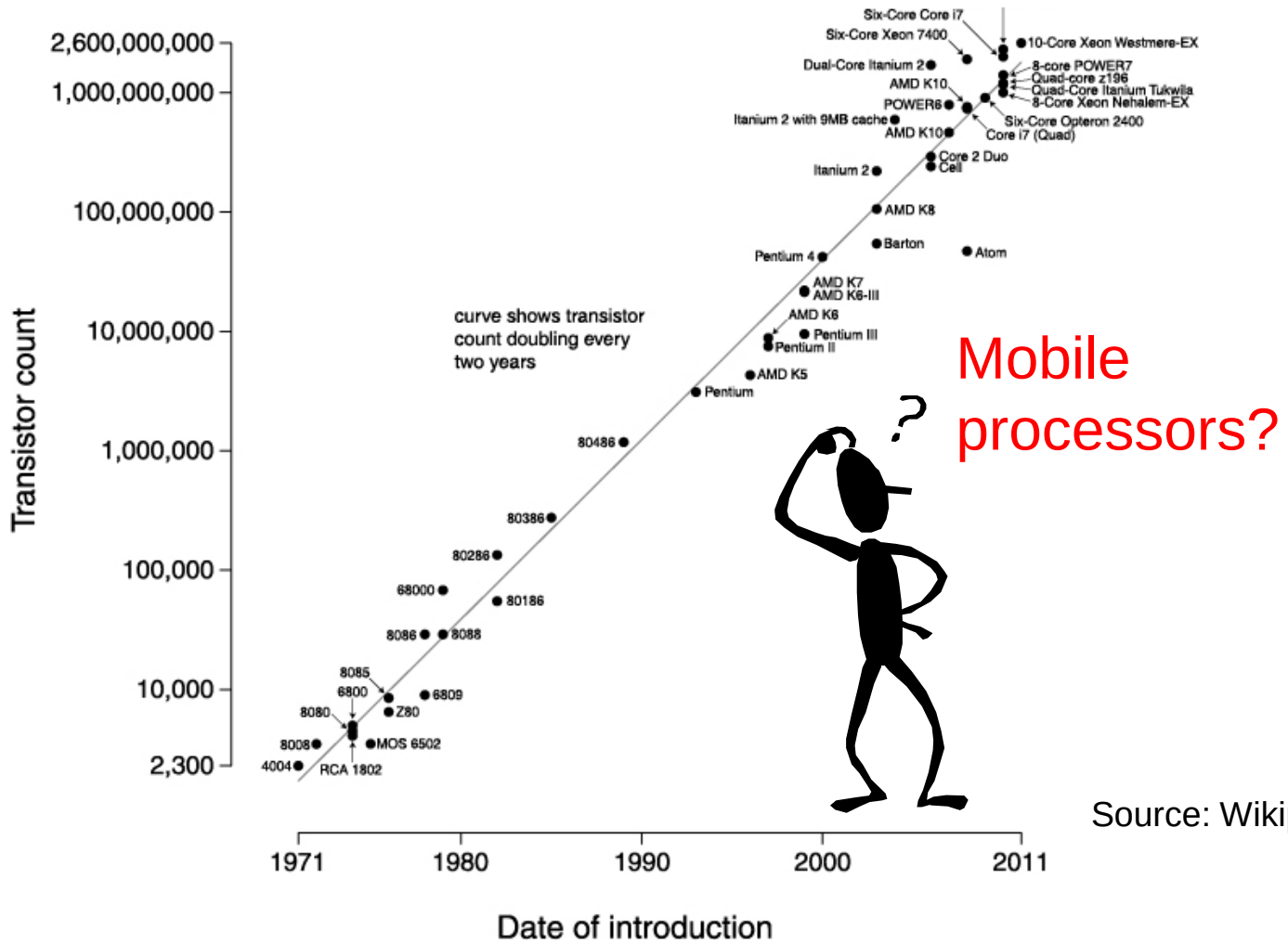


Source: Wikipedia

# Microprocessor Vendors Missed the Revolution

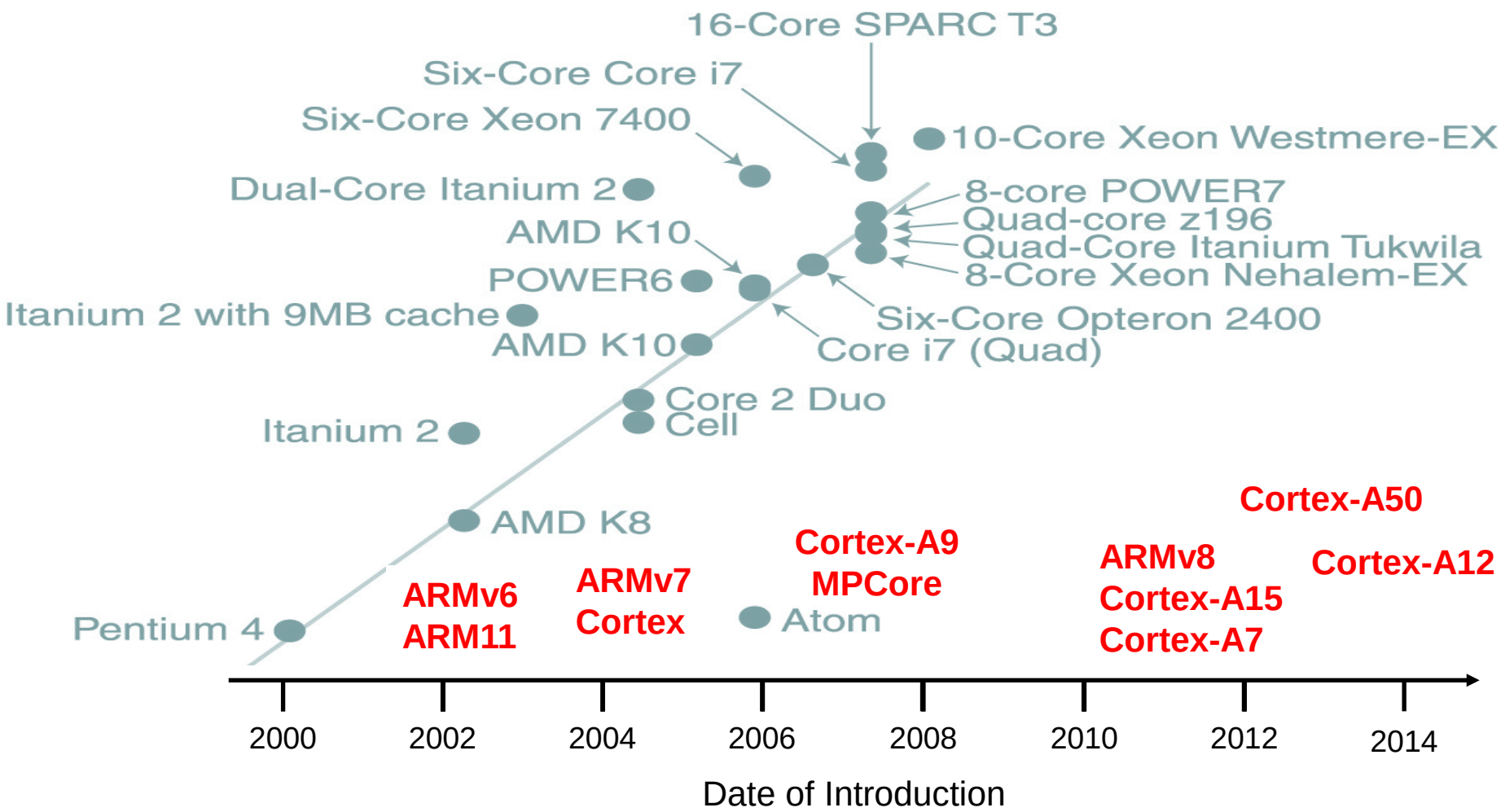

# Moore's Law was just one factor

- Billions of transistors were not required
- System partitioning for cost, power, efficiency
- Availability of SoC IP: CPUs, GPUs, DSPs, Memory
- Hardware & Software design

# Trends in Mobile Processors

- Development of the mobile processor and Moore's Law
- Top 5 Trends in Mobile Processors
  - Functional integration
  - LITTLE.big or Big.LITTLE
  - Heterogeneous Multiprocessing
  - Dual to Quad to Octa
  - The 64-bit question
- Conclusions

# Generic Smartphone

- Still separate analog, power, RF ICs

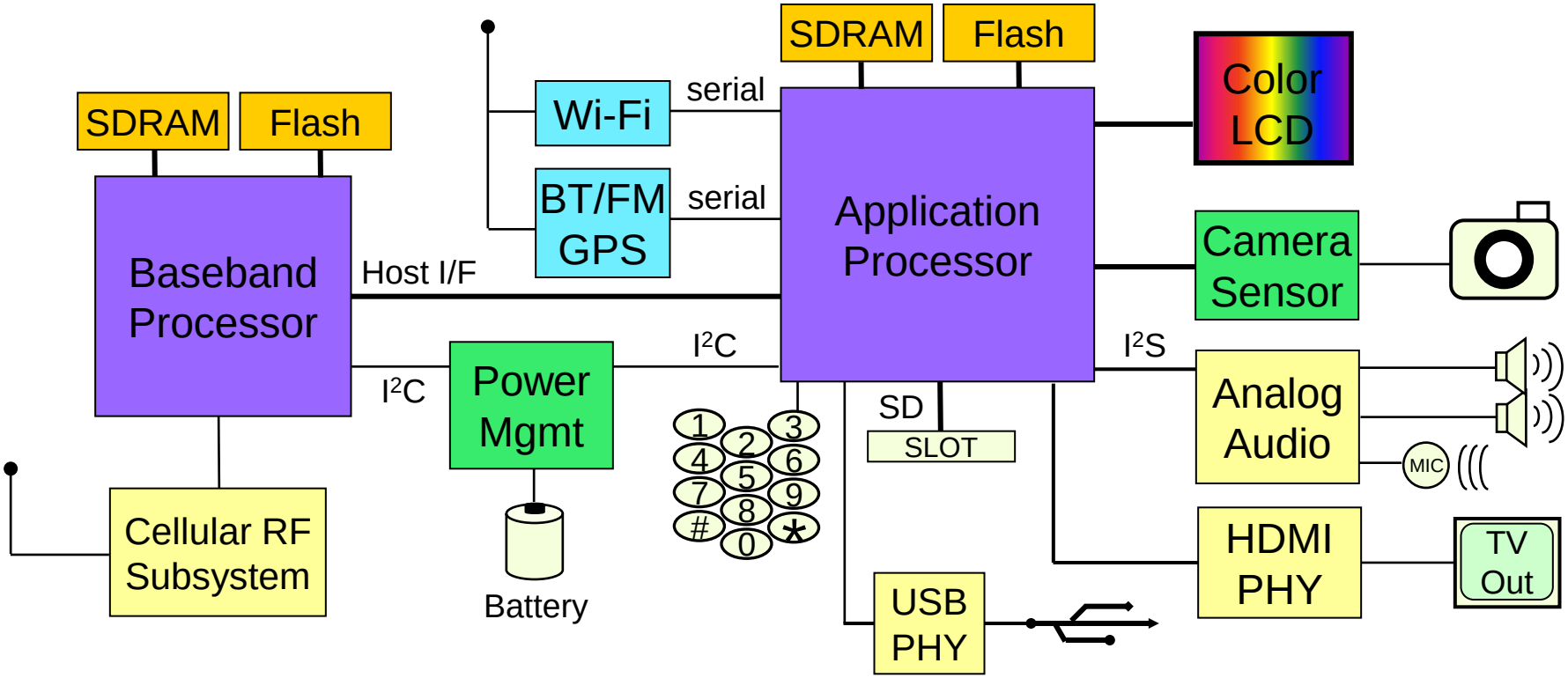

# Generic Mobile Application Processor

- Integrates all functions needed to run user applications in smartphones and tablets.

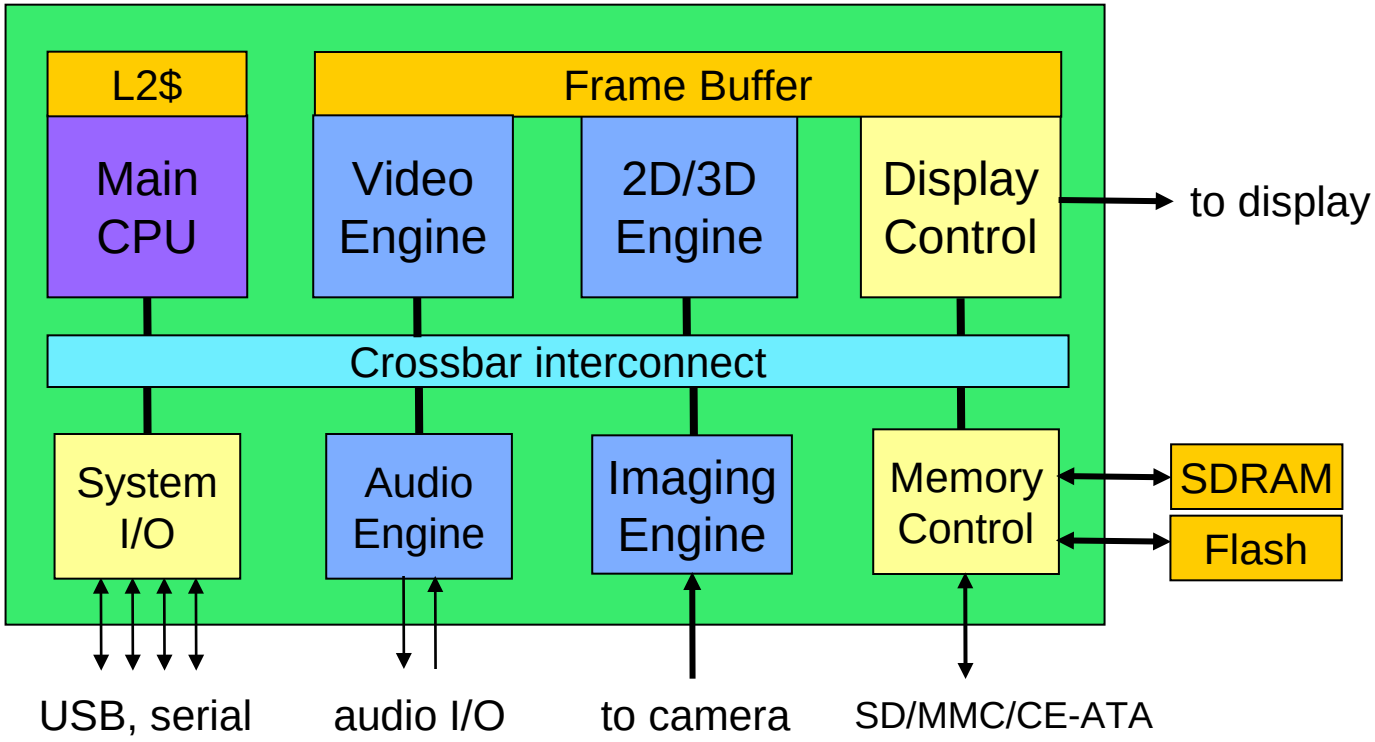

# Trend is To Integrated Smartphone Processors

- Adds cellular BB and (increasingly) wireless connectivity

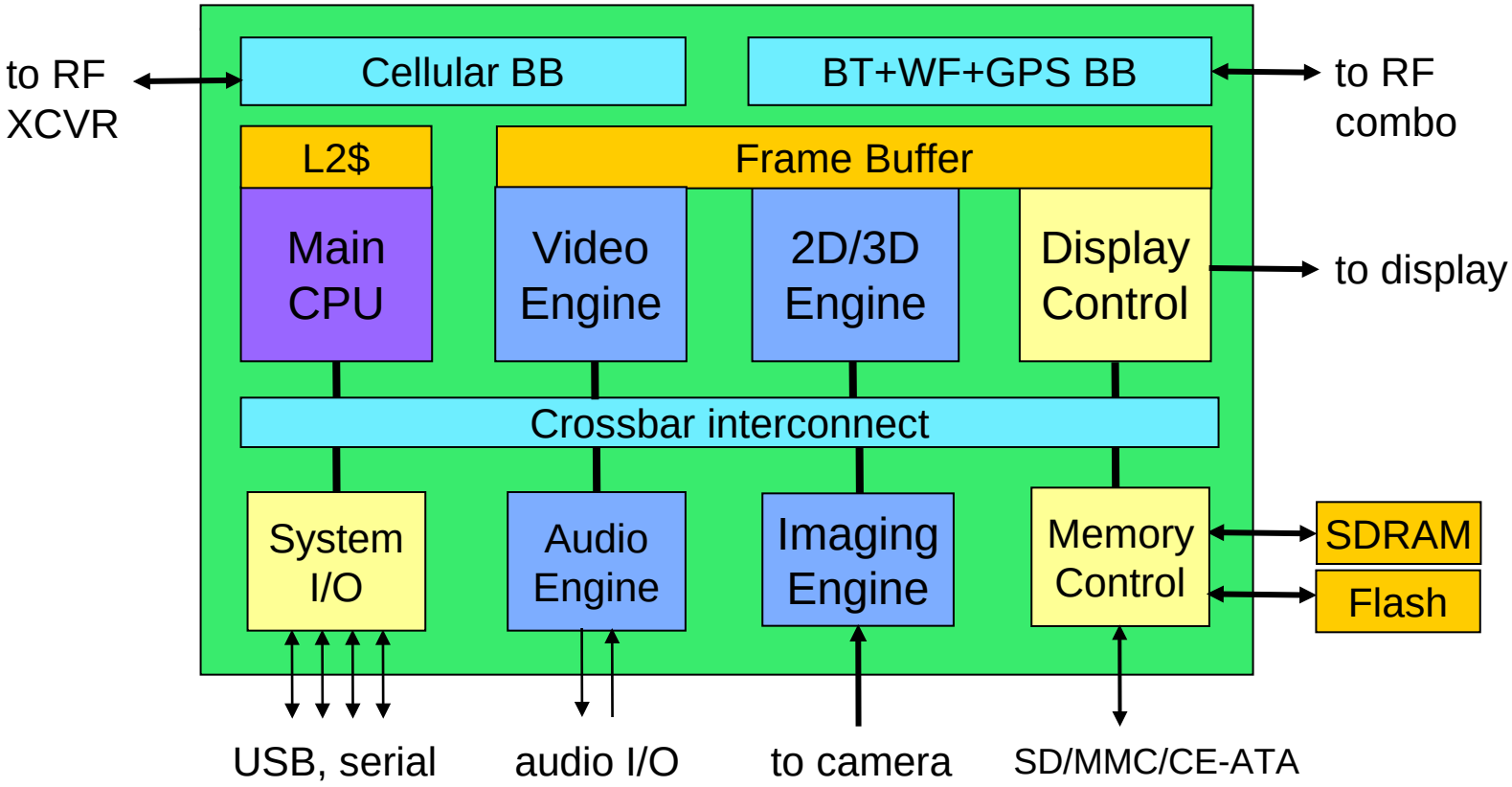

# Integration Trend Encompasses Wi-Fi

- Many high-end "hero" phones separate app processor (AP) and cellular baseband (BB) for "best of breed" design
  - iPhone, Galaxy S4 (int'l), LG Optimus, ZTE Grand, HTC One…
- But most smartphones use integrated AP+BB processors
  - Even some high-end models, such as Galaxy S4 (US version)
- Integration reduces BOM cost, power, and PCB area (size)
- More vendors are integrating BT + Wi-Fi + GPS connectivity
  - MediaTek, Spreadtrum, Qualcomm

# CPU Trend: Cortex-A7

- Performance = 90% of 40nm Cortex-A9 in 81% less area
  - At only 20% the power
- Typically ~1.2GHz in 28LP process, up to 2GHz in 28HPM
- Features:
  - Limited dual-issue
  - MPCore coherent multiprocessing
  - Integrated L2 cache
  - Floating point and Neon extensions
  - Other architectural extensions to match Cortex-A15

# CPU Trend: Cortex-A7

- Adopted by nearly all vendors for <$200 smartphones
- Performance + small area has driven multi-core to low-end
  - Allwinner[1]: dual A20, quad A31
  - Broadcom[1]: quad BCM23550
  - Marvell[1]: quad PXA1088
  - MediaTek: dual MT6572, quad MT6589, and octal MT6592
  - Qualcomm: quad MCM8226
  - Spreadtrum[1]
- Highest growth is now in low-cost segment for emerging markets

note[1] - manufactures in 40nm LP

# Example: $150 Quad-Core Smartphone


Lenovo A820 Quad Core 1.2GHz 1GB RAM 4.5" QHD Dual SIM Standby 8MP Smartphone

by Lenovo

Be the first to review this item | 13 answered questions

List Price: ~~$259.00~~
Price: $149.99
You Save: $109.01 (42%)

**Note:** Free shipping when purchased from Fude Trading Limited. Not eligible for Amazon Prime.

In Stock.

Ships from and sold by Fude Trading Limited.

- Lenovo A820 Quad Core 1.2GHz 1GB RAM 4.5" QHD Dual SIM Standby 8MP Smartphone
- CPU & GPU:MT6589 Cortex-A7 Quad Core 1.2GHz,PowerVR SGX544
- Memory: RAM 1GB , ROM 4GB
- Screen: 4.5" QHD, 960 x 540, 16M Colors, 8 MP/ Auto Focus , LED flash
- Network: WCDMA /GSM ,Android V4.1.2, battery 2000 mAh

14 new from $148.50  1 used from $155.00

# Smartphone Price Distribution (Conceptual)

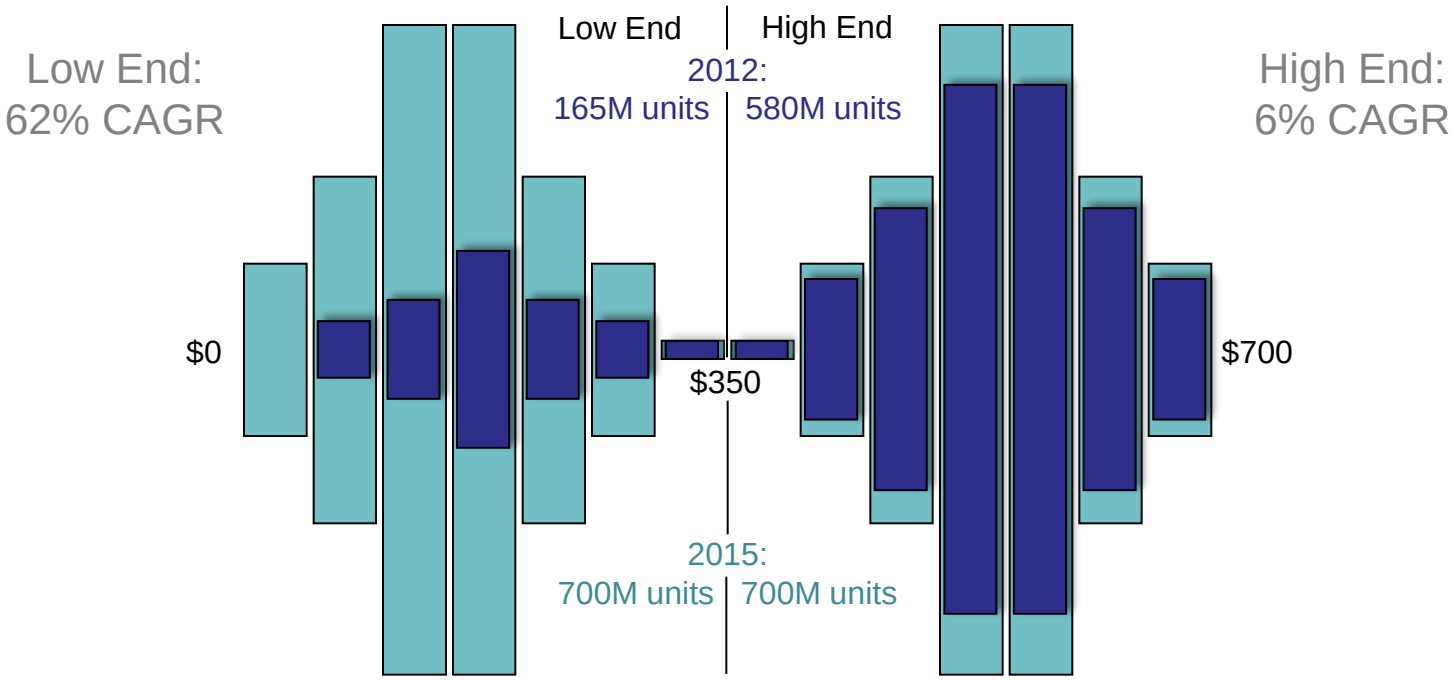


- Traditional smartphone market is $400+ price (unsubsidized)
- Emerging market (mainly China today) is <$250 price
- Most growth will be at lower price points

(Source: *Microprocessor Report*, 2/25/13)

# CPU Trend: Multiprocessing with ARM's big.LITTLE

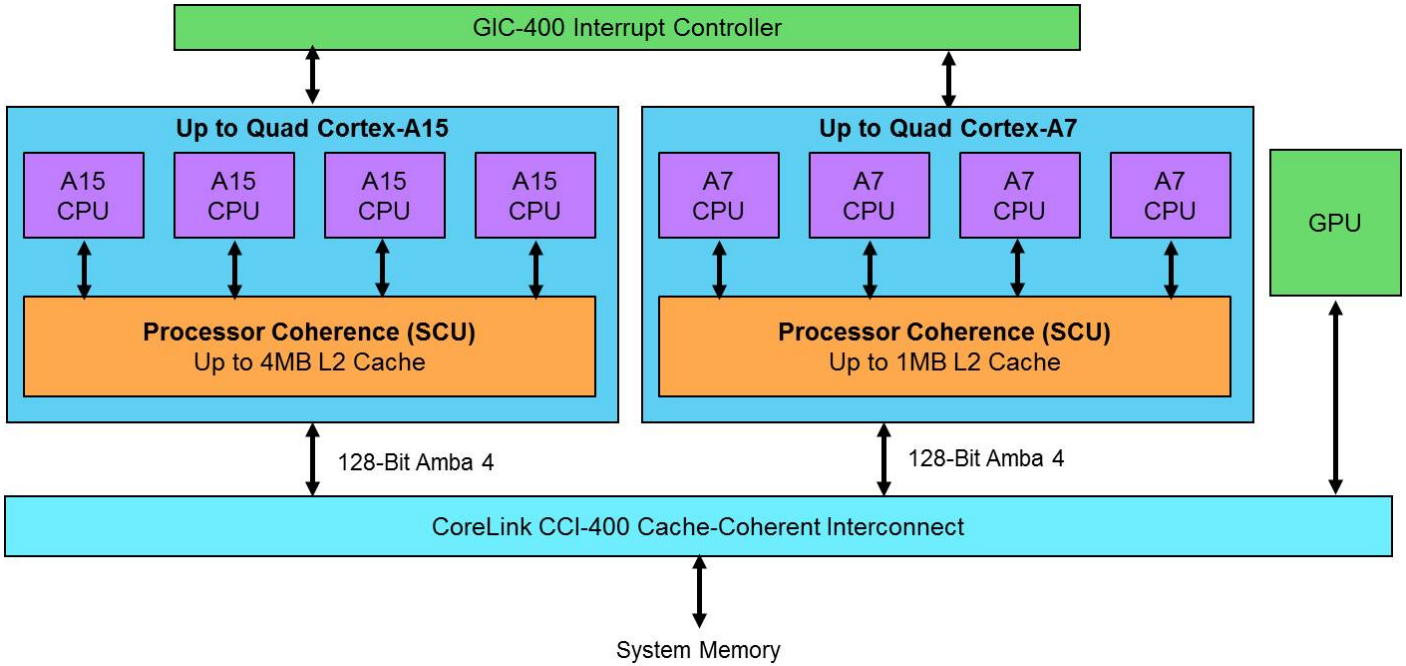


- Cortex-A15 = 1.7X performance of 40nm Cortex-A9, 22% less area
  - But at 110% the power
- Cortex-A7 is 3.5x more efficient in MIPS/W and 2x in MIPS/mm$^2$
- Dynamically shift processing to the most efficient cores
  - Power down other cores when not needed

# big.LITTLE in Samsung's Exynos Octa

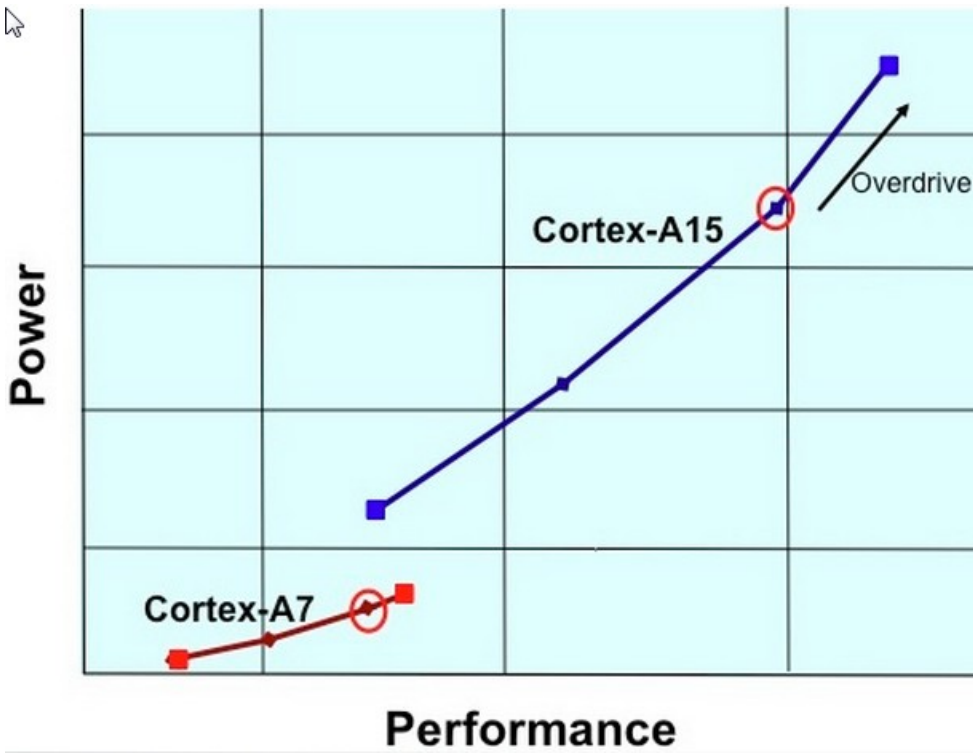


- OS sees only 1 cluster of CPUs
- Big CPUs are treated as a high-performance DVFS operating point by power management
- Tasks are "migrated" from little to big cluster for peak performance
- Plus
  - Saves average power
  - Continuous A15 operation risks thermal limiting
- Minus
  - No mixing of big & little CPUs
  - Can only run one cluster at a time

# big.LITTLE in Samsung's Exynos Octa

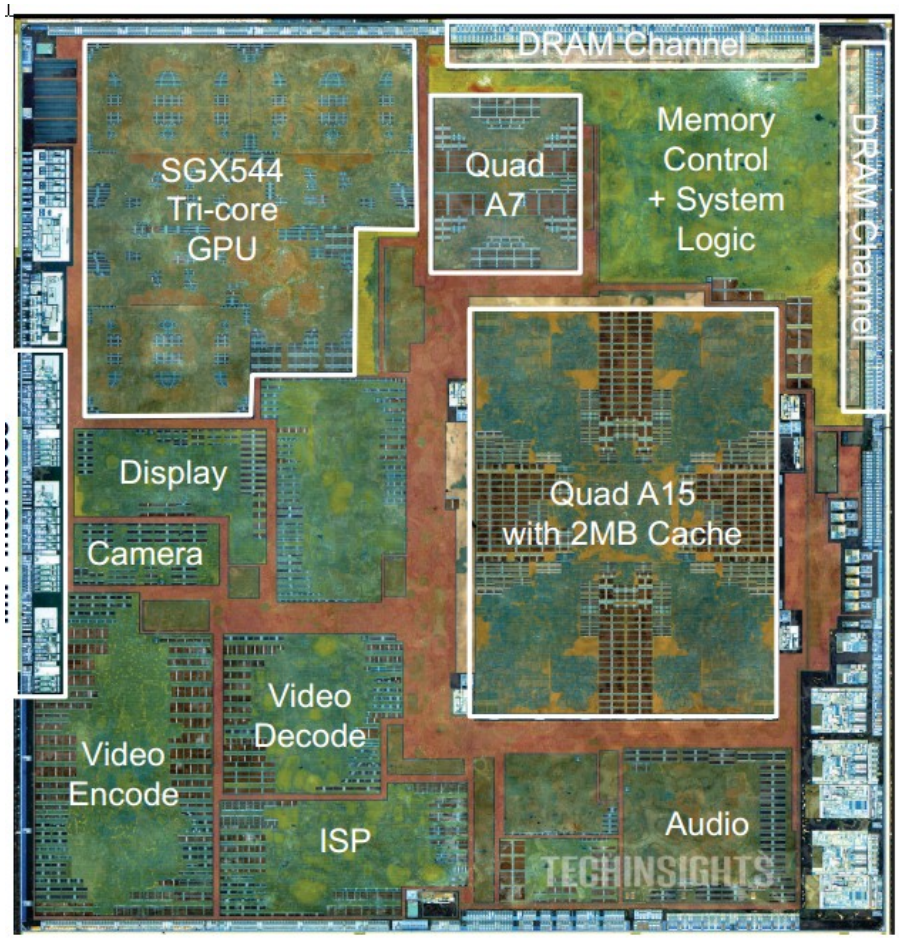


- Quad-A15 cluster = 19mm$^2$
- The quad-A7 cluster (with 512KB of L2) occupies only 3.8mm$^2$
- The total die area in Samsung's 28nm HKMG process is 122mm$^2$
- Point of comparison:
  - Haswell quad-core = 177mm$^2$ (1.6B xtors)

# Alternatives to Cortex-A15 and big.LITTLE

- Apple designed Swift CPU (A6 - iPhone 5), Cyclone (A7 - 5s)
- Qualcomm designed Krait CPU for its 28nm processors
  - About 1/3 power per MHz than A15, but worse perf per MHz
- Krait has better performance than A15 within 1W limit, but A15 scales to higher performance at higher power

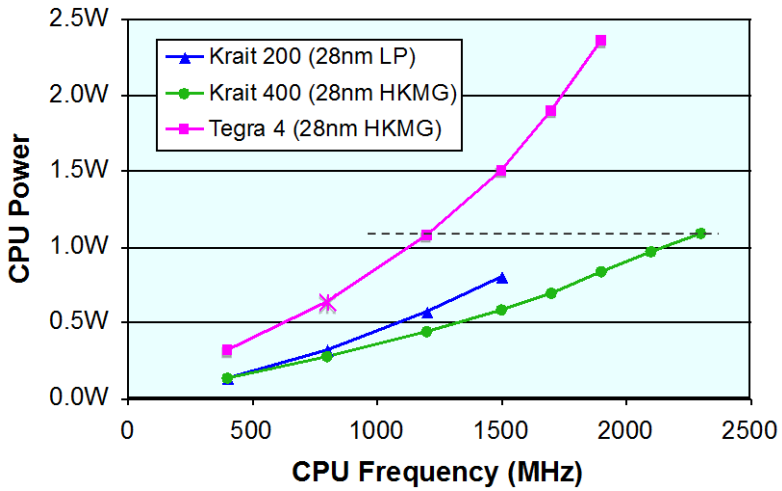


Sources: Qualcomm (Krait), Nvidia (T4 800MHz), Linley Group est

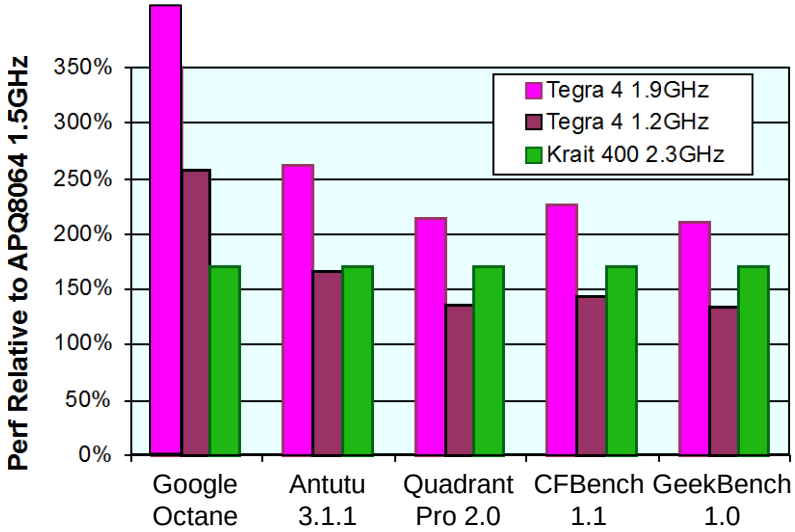


Sources: Nvidia (T4), third-party testing (APQ8064), Linley Group est

# CPU Trend: Heterogeneous Multiprocessing

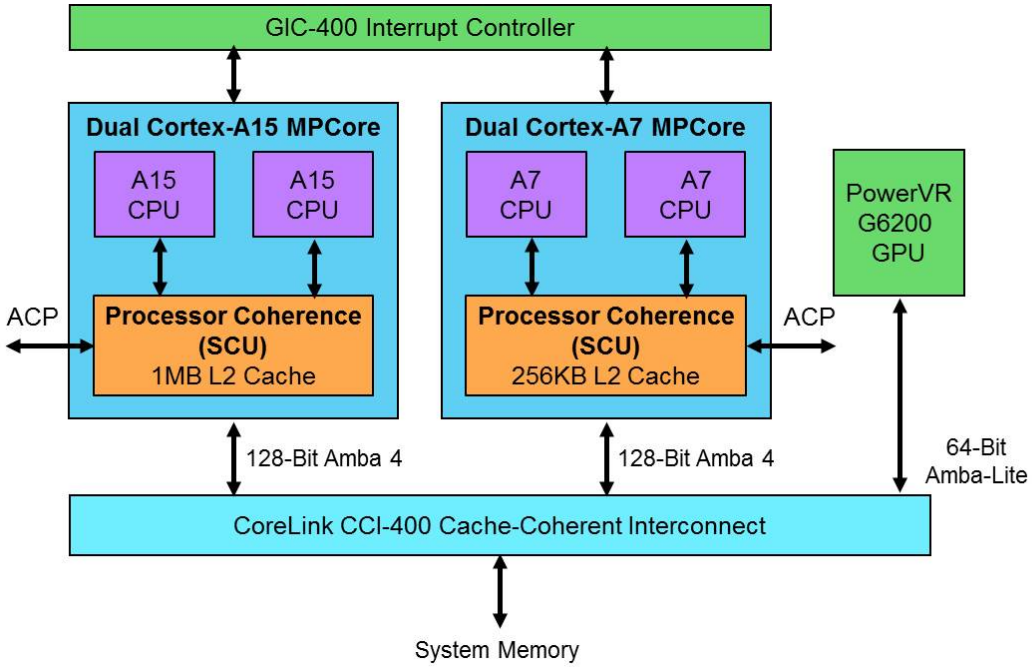


- Big.Little in MediaTek's MT8135
- 'True' heterogeneous multiprocessing
- Quad-core tablet processor
  - 2x Cortex-A15 CPUs @1.5GHz
  - 2x Cortex-A7s CPUs @1.2GHz
- Multicore load balancing
  - Global task scheduler can assign or move a task to any of the A7 or A15 CPUs
  - Big-little transition takes 80µsec
- All CPUs can run simultaneously

# CPU Trend: The Battle for 'True Octa' Processor

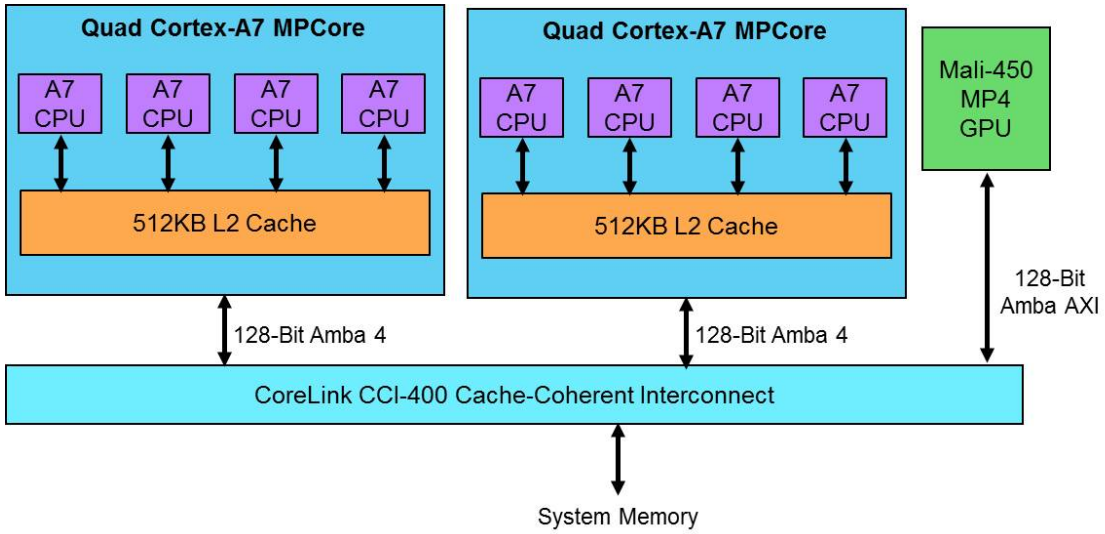


- Symmetric multiprocessing in MT6592 smartphone processor
  - ARM MPCore limited to 4 CPUs/cluster
  - 2X4 Cortex-A7 CPUs running at maximum 2.0GHz (28HPM)
  - Integrated 3G cellular BB, BT, Wi-Fi, GPS, FM
- Global task scheduler allows all 8 CPUs to run simultaneously
- Targeting multi-window Android

# Multicore Average CPU Utilization

- DUT: OPPO X909T
- CPU: APQ8064, 1.7G Quad core
- Test Time: 5min

*- 17 July 2013 by Testin*

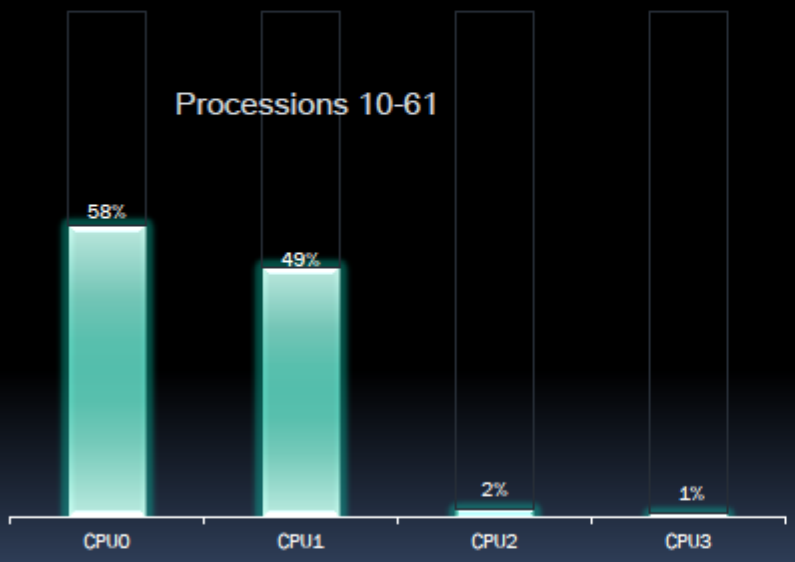


Top 10 Application of Google Play

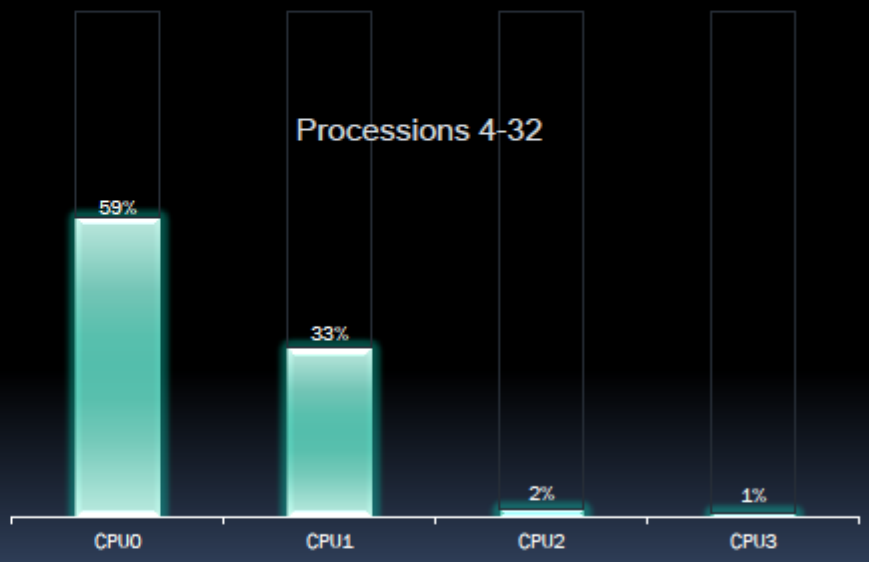


Top 10 Application of Google Play

- Measurement of multicore utilization on Qualcomm APQ8064
  - Source: Chinese smartphone test service Testin Inc.

# CPU Trend: 64-Bit Mobile Processors

- ARMv8 ISA
  - 32b instructions
  - 64b general purpose registers
  - 64b addresses to access >4GB memory
  - 64b operands
  - 32x 128b registers
  - Advanced SIMD and Floating Point
  - Architectural cleanup from ARMv7
  - ***Net 10 – 20% performance improvement***
- ARMv7-based processors can already use NEON SIMD instructions to perform 64-bit arithmetic

# CPU Trend: 64-Bit Mobile Processors

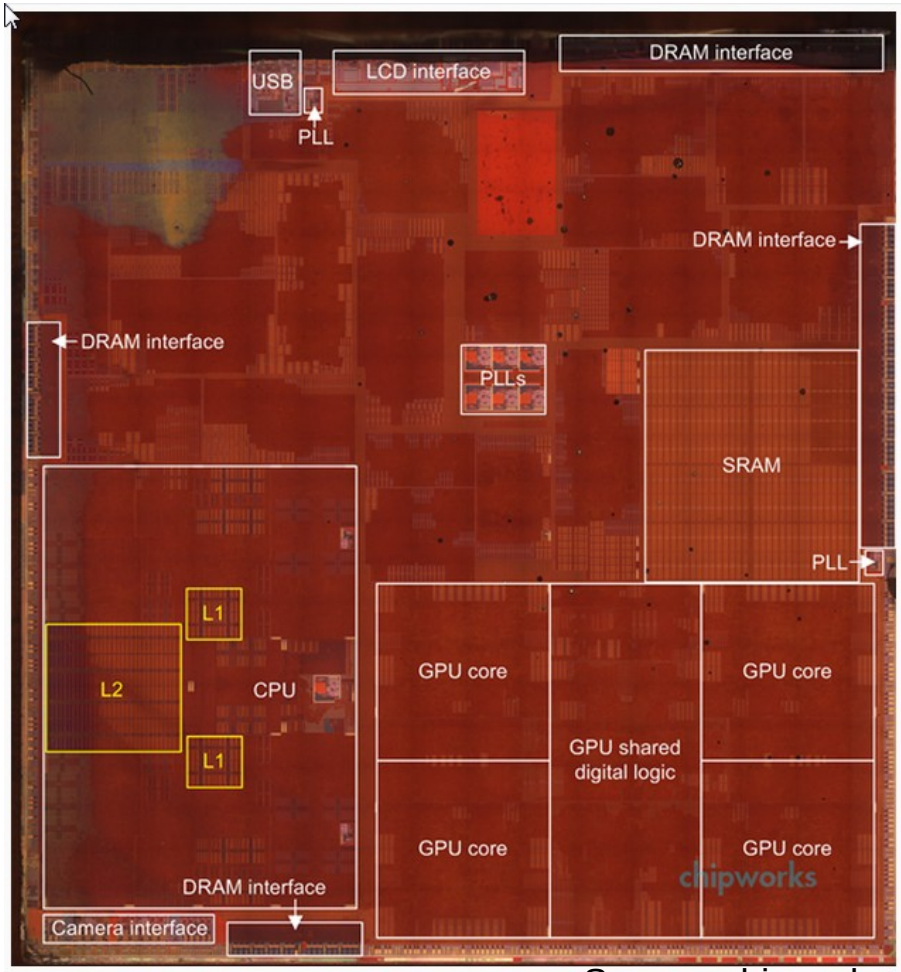


Apple A7 Processor Floorplan Source: chipworks

- Apple's A7: 1st 64b ARMv8 processor
  - Dual-CPU @1.3GHz, Quad-GPU
  - Up to 2X perf of Cortex-A15 class A6
- Most of performance gain from µArch customizations
- Benefit from 28nm in A7 from 32nm in A6, 102mm$^2$
- But – same clock rate!
- 2x the area devoted to Imagination Rogue GPU

# CPU Trend: 64-Bit Mobile Processors

- Intel - new 22nm FinFET processors
- Silvermont update for Atom CPU
- Predicted 50% IPC improvement
- Quad-core Bay Trail for Tablets
  - Maximum 2.4GHz clock rate
  - 32b/64b Windows or Android
  - Intel HD graphics
- Dual-core Merrifield for smartphones
  - Estimated 2.1GHz
  - 32b/64b Android
  - Imagination PowerVR GPU
- Estimated in production 1Q14

# Trends in Mobile Processors - Conclusions

- Market is bifurcating into low-cost and high-performance tiers
- Low-cost segment
  - Higher functional integration, cellular BB + connectivity
  - Multi-core has come to the low-end
  - Small area, low-power CPUs
- High-performance
  - Architectural alternative to stay within power envelope
  - Big.LITTLE
  - Customized CPUs by ARM architectural licensees
  - Heterogeneous multiprocessing
- Octa wars?
- 64-bit: Hype versus reality

The Linley Group

Research.
Analyze.
Advise.

# You have questions?

We have answers.