Building embedded and dedicated applications using Linux and other O/Ss

Bill Rousseau, Software Consultant

w.rousseau@ieee.org

http://www.ieee-sv-consult.org

Scope

- New concerns for applications programmers
- Possible O/Ss
- Real-time O/Ss
- Simple Linux application experience
- The GPL license
- Home brew O/S
- Building Linux kernel

Applications programmers face new system issues

- Potential race conditions(hard-soft)
- Preemption for fast response
- Potential race conditions (soft-soft)
- Locks, atomic operations, and ring buffers to avoid races
- Deadlocks

- Need for volatile keyword
- Priority scheduling
- Priority inversion
- Deadline task scheduling
  - Needed?
  - Desirable
  - Undesirable

What are possible O/Ss?

- DRDOS
- SCO Unix/Unixware
- VxWorks
- QNX
- Windows/Windows CE
- eCos
- RT Linux/Preemptive Linux/Linux
- Home made

Linux offers significant advantages

- No license fees–important for 1000s of systems
- All the normal Unix features and utilities
- Small footprint possible
- Robust

RT can mean two things

- Direct digital control/time critical/hard RT
  - A-D samples, D-A settings
  - Binary signals and settings
- Supervisory control/less time critical/soft RT
  - Buffered by hardware
  - Adjust set points
  - GUI

Some O/Ss are suited to one and some to both

- Direct digital—RT Linux, eCos, QNX, VxWorks, home made, Windows CE

- Supervisory—RT Linux, Preemptive Linux. Linux, SCO, Unixware, Windows CE/other Windows

RT Linux is two O/Ss

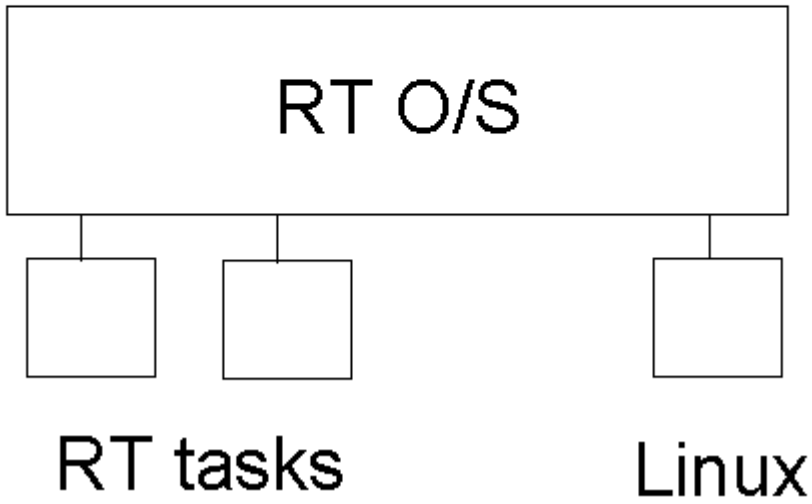

Linuxes have different kernel latency

- Typical nos. for ~700 MHz Pentium
- Typical worst case results:
  - RT-Linux should be~μ secs.
  - Preemptive Linux <3 ms
  - Linux~100 ms (average much much less)

Kernel latency does make a difference more often than one might think

- Solaris 2.7 (preemptive)~4000 credit card transactions/minute
- Linux 2.2 (non-preemptive) ~3800 credit card transactions/minute
- Average transaction time slightly less on Linux
- Outliers made the difference

Interrupt and context switch latency are also important

- Real interrupt latency is affected by interrupt handlers–most O/Ss are in the 5-100 μ sec range
- Linux is relatively fast for process
- Preemption may require stack switch

O/S provides app. support

O/S Capability	***General***	***Embedded***	***Dedicated***
File system	Yes	Maybe	Usually
Cooperative MT	Windows	Sometimes	Windows
Preemptive MT	yes	Sometimes	Yes
Interrupts	Yes	Yes	Yes
Sophisticated scheduling	No	Maybe	Maybe
Program loading	Yes	No	Yes
Shared libraries	Yes	No	Yes
Job execution	Yes	Maybe	Yes
Resource protection	Usually	Seldom	Usually
Inter-task com.	Yes	Yes	Yes

O/S Capability	***General***	***Embedded***	***Dedicated***
Atomic ops. and locks	Yes	Yes	Yes
Peripheral support	Yes	Seldom	Usually
Utilities	Yes	Sometimes	Yes
GUI	Yes	Seldom	Sometimes
Network cap.	Yes	Sometimes	Yes
Portability	Yes	Seldom	Sometimes

Credit Cards over Internet
Pre-prototype schedule:

Mon	***Tue***	***Wed***	***Thu***	***Fri***	***Sat***	***Sun***
Select/ order hardware	Modify test bed software	Make 2-diskette Linux system	Test and debug on PC		Contingency	

Mon	***Tue***	***Wed***	***Thu***	***Fri***	***Sat***	***Sun***
Hardware arrives AM	Install on DoC	Test and debug	Contingency			

Mon	***Tues***
Contingency	BoD meeting AM

PC/104 processor board

VersaLogic Corporation Bobcat 586 Processor

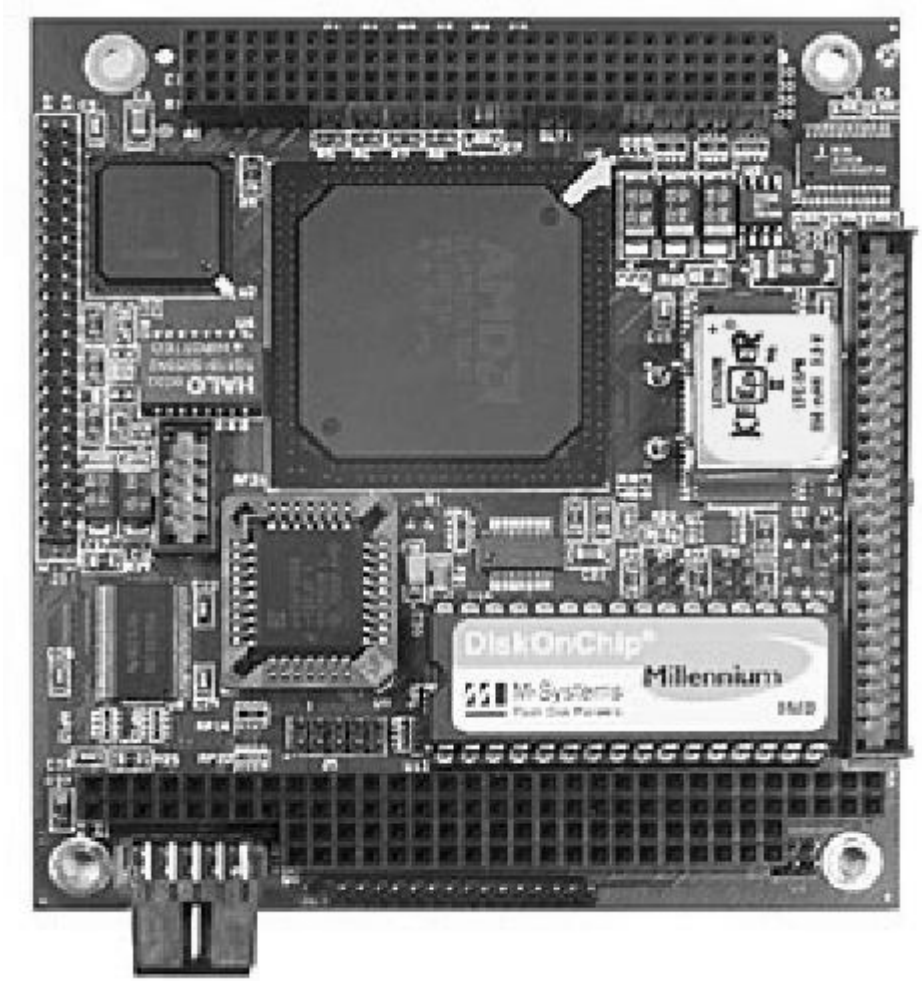

Project didn't go as planned

- First week was ok
- Hardware arrived late PM Tuesday
- Hardware was flacky
  - Didn't work reliably until powered up for 2 hours
  - Disk-On-a-Chip didn't work
- Distributor unhelpful

Solution:

- Power up the night before meeting
- Make a 1-diskette bootable floppy version
- Use ramdisk for root filesystem

A whole working Linux system and a simple application fit on one diskette!

Mini-distribution built from Slackware

- Boot patterned after 2-diskette install/repair
- Utilities, libraries, etc. came from Slackware
- Used ramdisk and RO file system mounts
- Startup was simple

Linux (or Unix) startup need not be complex

- Kernel is loaded
- Root filesystem is mounted
- Kernel starts init; init reads inittab
- Init runs startup sh scripts (as root)
- Scripts start daemons and does housekeeping
- Complexity is needed for multiuser servers

Init also performs other management tasks

- Manages login-related programs
- Starts run-level change scripts
- Discards exit codes from orphans
- Starts shutdown and reboot scripts

Simple rules protect proprietary code from GPL

- Use shared libraries
- Make proprietary kernel extensions loadable modules
- Using gcc and header files is usually ok*

---

* Defines and macros in header files must be less that a quite large maximum size

Changes to GPL code require you to:

- Note your change in source
- Make source available for three years
  - Free (e.g. on web site)
  - With product
  - Media charge for copy
- Avoid patents or other restrictions

Exercise due diligence

- Read the GPL and LGPL
- Make sure what license applies to code or tools you use
- If warranted, obtain legal advice from a qualified attorney

You want to build your own O/S:

Minimal O/S is a scheduler

- For really simple needs a loop design may work
- Alternatively a loop design with interrupt handlers
- More complicated:
  - A cooperative MT scheduler
  - A preemptive MT scheduler

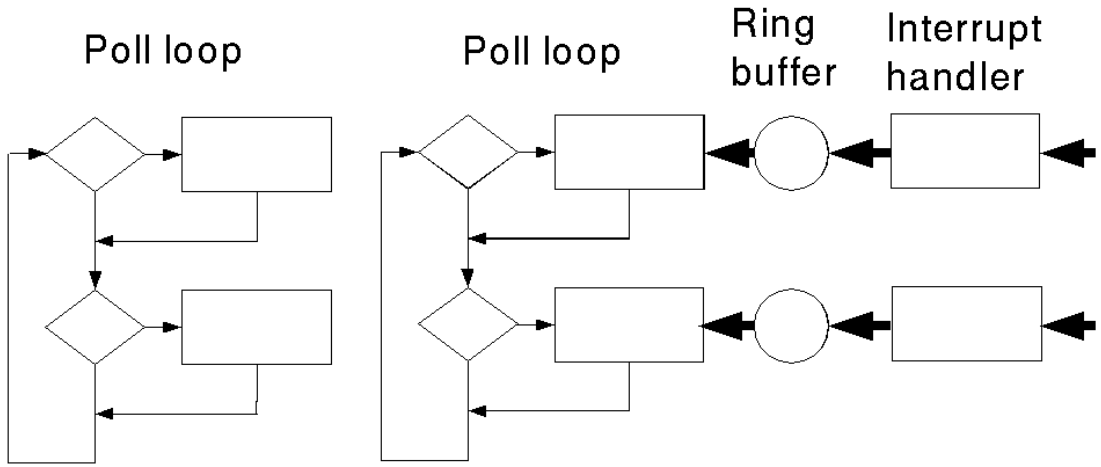
Poll loop
Poll loop
Ring
buffer
Interrupt
handler

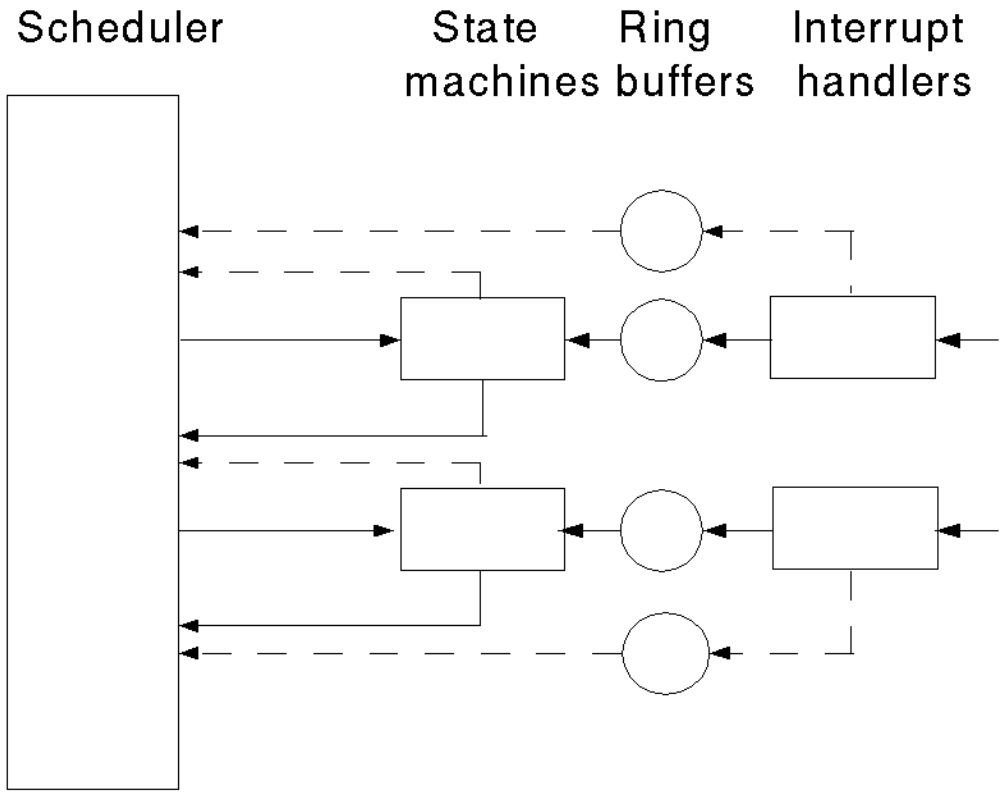
Scheduler
State machines
Ring buffers
Interrupt handlers

Multi-tasking can be cooperative or preemptive

Cooperative	Preemptive
• simple • avoid race and lock problems	• more responsive • protection from errant tasks
• ugly SMs • errant task can be a problem	• complicated • race and lock problems

Home brew O/S was powerful enough for spacecraft

Requirements (partial):

- RISC cpu selected by Mgt.
- Precise, responsive attitude control
  - Rate gyros
  - Startracker–processing delay
  - DDC of thrusters, measurements
- Many other tasks

Key part was a Kalman filter

- Kalman filter is a model of the system with a feedback loop
- Measurements delays can be corrected
- Control actions can be projected forward with good accuracy

Successful design used the cooperative multitasking model

- One timer interrupt
  - Preplanned thruster schedule and measurements and poll otherwise
- Priority tasks
  - Kalman filter computation
- Background tasks
  - Startracker image processing

Linux is ported to many architectures

- i386(etc.) and Intel 64(Itanium)
- Alpha (DEC/Compaq/HP-Compaq)
- Mips and Mips 64
- PArisk (HP)
- S390 (IBM mainframe)
- Sparc and Sparc 64 (Sun)
- PowerPC (IBM and Apple)
- ARM

Cross builds are quite possible

- This is complicated–avoid it if you can
- Try to debug as much as possible on a Linux workstation
- See references

Setting up Linux for a kernel build

- Get Linux: www.kernel.org
- Uncompress and untar in /usr/src
- mv linux linux-<version>
- ln -s linux-<version> linux
- cd linux

Use make menuconfig

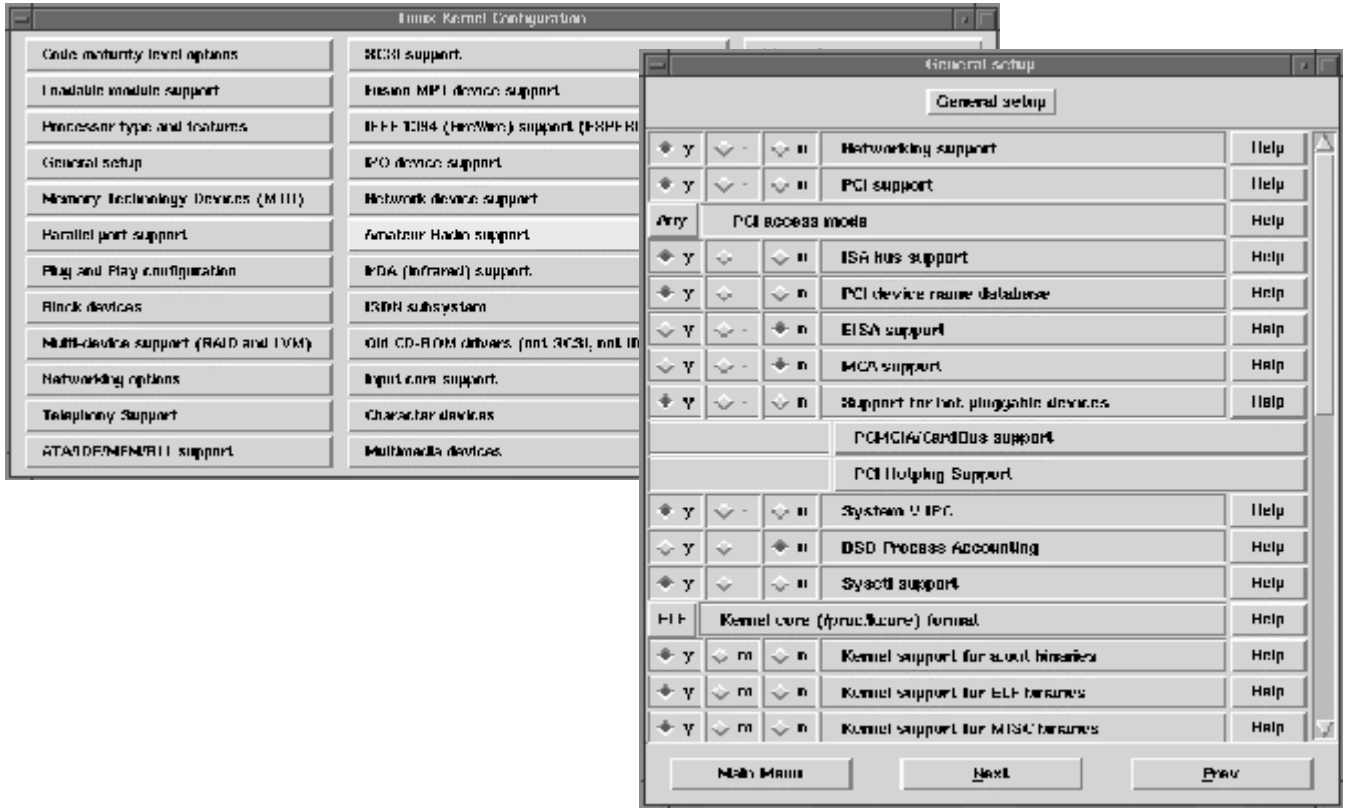

or make xconfig

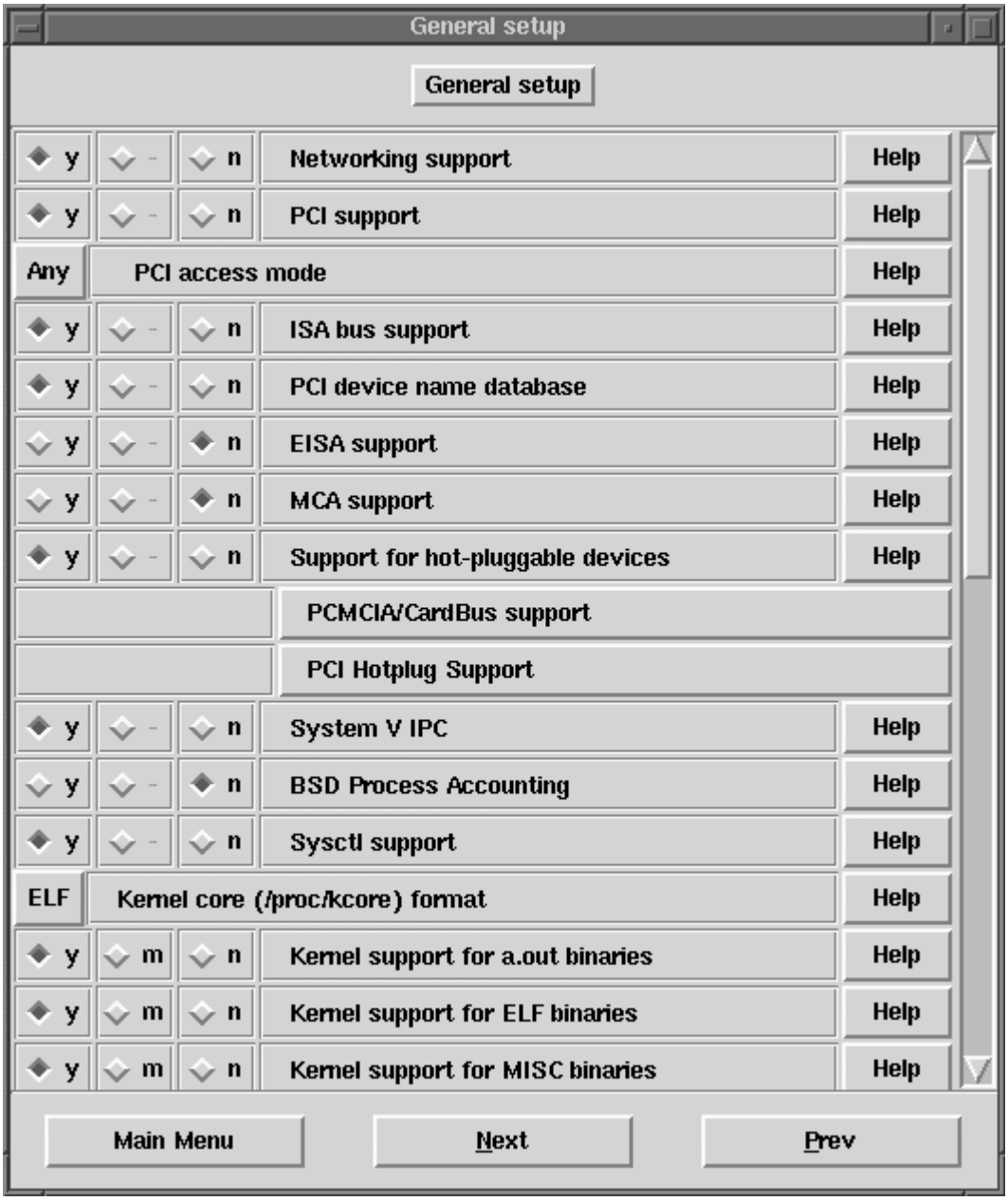
General setup
General setup
y - n Networking support Help
y - n PCI support Help
Any PCI access mode Help
y - n ISA bus support Help
y - n PCI device name database Help
y - n EISA support Help
y - n MCA support Help
y - n Support for hot-pluggable devices Help
PCMCIA/CardBus support
PCI Hotplug Support
y - n System V IPC Help
y - n BSD Process Accounting Help
y - n Sysctl support Help
ELF Kernel core (/proc/kcore) format Help
y m n Kernel support for a.out binaries Help
y m n Kernel support for ELF binaries Help
y m n Kernel support for MISC binaries Help
Main Menu
Next
Prev

Now build it

- make dep
- make bzImage
- make modules
- make modules_install*
- cp arch/<arch>/boot/bzImage <dest>

---

*Be sure you don't clobber setup on build computer

What if I get an error?

- make bzImage >log 2>&1
- Identify source of error in log
- Possible causes
  - One selected option requires another
  - Patched kernel does not support option
  - Driver upgrade missed in kernel version
- Use grep on .c, .h, and Makefiles

One can make kernel changes

- SGI added it’s IRIX SCSI subsystem to Linux
- Linux header file parameter changes are fairly safe
- Modify device drivers
- Write your own device drivers

Conclusions

- Linux applications aren’t difficult
- The GPL license need not contaminate proprietary code
- Home brew O/Ss are feasible
- Building a custom Linux kernel is not difficult

References

Hollabaugh, Craig, **Embedded Linux: Hardware, Software, and Interfacing**
www.embeddedlinuxinterfacing.com
[Strong on cross build; see website for script.]

Embedded Linux Consortium
www.embedded-linux.org
[Proposing a standard.]

MontaVista Software
www.mvista.com
[Preemptive kernel.]

Linux Journal
www.linuxjournal.com

Embedded Systems Programming
www.embedded.com

Silicon Penguin
www.siliconpenguin.com

FSMLabs
www.fsmlabs.com
[RT Linux.]

Just do a web search